Deloitte.

Potential impact of illicit peer-to-peer traffic on ISPs' networks and costs.

A Report for the Motion Picture Association

16 June 2010

This report has been prepared on the basis of the limitations set out in the engagement letter and the matters noted in the Important Notice From Deloitte on page 1.

Contents

Important Notice from Deloitte 1
Executive Summary 2
1 Introduction 3
2 Benefits from reducing network congestion 4
2.1 Estimating the impact on network congestion 10
Appendix A Modelling assumptions 12

Important Notice from Deloitte

This report (the "Report") has been prepared by Deloitte LLP ("Deloitte") for the Motion Picture Association in accordance with the contract with them dated 11th June 2010 ("the Contract") and on the basis of the scope and limitations set out below.

The Report has been prepared for the purposes of assisting the Motion Picture Association in assessing the potential benefits to ISPs from implementing measures to tackle illicit peer-to-peer file sharing, as set out in the Contract. It should not be used for any other purpose or in any other context, and Deloitte accepts no responsibility for its use in either regard including their use by the Motion Picture Association for decision making or reporting to third parties.

The Report is provided exclusively for the Motion Picture Association's use under the terms of the Contract, however it may be made available to the Department for Business Innovation and Skills and other parties in accordance with the terms of the Contract. No party other than the Motion Picture Association, including the UK Department for Business Innovation and Skills, is entitled to rely on the Report for any purpose whatsoever and Deloitte accepts no responsibility or liability to any party other than the Motion Picture Association in respect of the Report and/or any of its contents.

As set out in the Contract, the scope of our work has been limited by the time, information and explanations made available to us. The information contained in the Report has been obtained from the Motion Picture Association and third party sources that are clearly referenced in the appropriate sections of the Report. Deloitte has neither sought to corroborate this information nor to review its overall reasonableness. Further, any results from the analysis contained in the Report are reliant on the information available at the time of writing the Report and should not be relied upon in subsequent periods.

Accordingly, no representation or warranty, express or implied, is given and no responsibility or liability is or will be accepted by or on behalf of Deloitte or by any of its partners, employees or agents or any other person as to the accuracy, completeness or correctness of the information contained in this document or any oral information made available and any such liability is expressly disclaimed.

This Report and its contents do not constitute financial or other professional advice, and specific advice should be sought about your specific circumstances. In particular, the Report does not constitute a recommendation or endorsement by Deloitte to invest or participate in, exit, or otherwise use any of the markets or companies referred to in it. To the fullest extent possible, both Deloitte and the Motion Picture Association disclaim any liability arising out of the use (or non-use) of the Report and its contents, including any action or decision taken as a result of such use (or non-use).

Executive Summary

Peer-to-peer (P2P) file sharing – the exchange of content files containing video, audio, data or anything in digital format between users on a computer network – has increased significantly in the last few years. Since the rise of Napster, one of the first popular file sharing applications, and subsequent technology developments, there has been a significant proliferation of file sharing networks. It is reported that there are some 6.5 million people in the UK who are active unlawful file-sharers[1].

It is this trend that has led the UK Government and others across the globe to seek to impose measures to tackle illegal file-sharing. On 8th April 2010, the Digital Economy Act received Royal Assent in the UK. The Act imposes an obligation on the ISPs to send notifications to subscribers who have been identified in relation to alleged infringements of copyright. This study assesses the potential impact that illegal P2P traffic may have on ISPs' networks and costs.

Different types of users with varying internet usage requirements place different demands on the network infrastructure. P2P applications use higher download and upload bandwidths than standard users.

If left unmanaged, the additional traffic generated by P2P could result in increased cost for an ISP due to the additional network capacity required. However, our understanding confirmed in discussions with industry is that, across the UK ISPs traffic management is widespread. Traffic management enables ISPs to actively manage individual subscriber traffic within its network. Therefore, this reduces the need to increase the total capacity of the network at peak times, helps maintain quality of service for standard users and at the same time allows P2P to operate optimally during non-peak hours.

We have estimated the cost saving impact that reducing illegal P2P traffic could have on ADSL ISPs in the UK, which represent a majority of the UK broadband market. The most notable time when P2P traffic can have an impact on bandwidth consumption is during peak periods of activity, typically between 6 and 10 pm. We have assumed that traffic management – a combination of rate limiting and prioritisation – is applied which reduces to some extent the cost impact that P2P traffic would otherwise have. Our analysis suggests that tackling illegal P2P use could result in a cost saving of up to approximately £10 million across all ISPs who acquire BT IPstream in our central case (varying between approximately £3m or up to £22m in our low and high cases respectively).

In contrast, the cable network was first to implement a Next Generation Network (NGN) and is expected to have available capacity. The mobile network is apparently limited for a P2P user within the UK when compared to a fixed ISP, and therefore P2P is expected to place less capacity constraints on mobile than fixed networks, although this may change with the advent of 4G.

[1] BIS, Impact Assessment for the Digital Economy Bill, November 2009.

1 Introduction

Deloitte have been commissioned by the Motion Picture Association to provide an independent assessment of the potential benefits to the Internet Service Providers (ISPs) of helping reduce illegal P2P file sharing as envisaged in the Digital Economy Act 2010.

Peer-to-peer (P2P) file sharing – the exchange of content files containing video, audio, data or anything in digital format between users on a computer network – has increased significantly in the last few years. Since the rise of Napster, one of the first popular file sharing applications, and subsequent technology developments, there has been a significant proliferation of file sharing networks. It is reported that there are some 6.5 million people in the UK who are active unlawful file-sharers[2].

It is this trend that has led the UK Government, alongside others, to seek to impose measures to tackle illegal file-sharing. On 8 April 2010, the Digital Economy Act ('the Act') received Royal Assent. The Act imposes an obligation on the ISPs to send notifications to subscribers who have been identified in relation to alleged infringements of copyright.

The Government impact assessment of the options to address illegal file-sharing estimates a sales displacement impact on the UK creative content industries of approximately £400m in 2007[3]. This assessment did not consider, however, the possible benefits that may accrue to the ISPs. This report seeks to assess in the UK market the potential impact that illegal P2P traffic may have on ISPs' networks and costs.

The question of the potential impact on ISPs' networks of tackling illegal P2P is assessed against the background of the trends observed in media, telecommunications and converged markets.

[2] BIS, Impact Assessment for the Digital Economy Bill, November 2009.

[3] BIS, Impact Assessment for the Digital Economy Bill, November 2009.

2 Benefits from reducing network congestion

An ISP's main asset is its network infrastructure. The ability of an ISP to manage the efficiency of the network, i.e. balance of number of users against the bandwidth available, directly impacts the operational and financial performance of the company.

Different types of users with varying internet usage requirements place different demands on the network infrastructure. A standard user will typically use the internet for activities such as web page browsing, email, music streaming or downloading or video streaming. Assuming that video streaming is only standard definition, these services may be considered to have smaller bandwidth requirements. However, the profile of a P2P user is notably different, in that the P2P applications download from numerous sources at one time to get the maximum download speed. If there are enough sources, P2P users may use all of the download bandwidth for sustained periods unlike a standard user who will have smaller bandwidth needs for shorter periods. If unrestricted, a P2P application will also use all of the available upload speed to deliver content to other users. As such, if an ISP were able to completely remove P2P users from their networks, the overall level of traffic could reasonably be expected to drop.

P2P in different types of ISP networks

P2P is the largest single contributor towards traffic volume transferred within service providers' networks in the UK, representing 38% of all broadband traffic in 2009[4]. Left unmanaged, P2P can pose capacity challenges during peak times within ISP networks – typically between 6 and 10pm.

Broadband services in the UK are provided over different infrastructures – ADSL, cable and mobile.

Understanding the impact of P2P on ADSL based networks is key as they represent 79% of the UK broadband market[5]. ISPs can provide ADSL either through Local Loop Unbundled (LLU) services or wholesale products from BT Wholesale such as BT IPstream. BT IPstream is a regulated product from BT and provides connectivity from the end user to an ISP IP network – see Figure 1 - BT IPstream Overview. LLU services utilise similar technology to BT IPstream and will exhibit similar capacity challenges during peak times.

Within the BT IPstream product there are two points at which the number of users can be contended:

- At the exchange into the Virtual Paths, but this is controlled by BT.
- At the edge of the ISP network where a chosen number of circuits (BT Centrals) are purchased to provide connectivity between the BT IP Network and the ISP IP Network. By changing the contention ratios at the BT Central, an ISP can control the number of users assigned to each circuit.

[4] Cisco Virtual Networking Index 2010 (UK) – Monthly Volume, 31 May 2010.

[5] Enders Analysis, "UK broadband and telephony trends to December 2009", March 2010.

Figure 1 - BT IPstream Overview

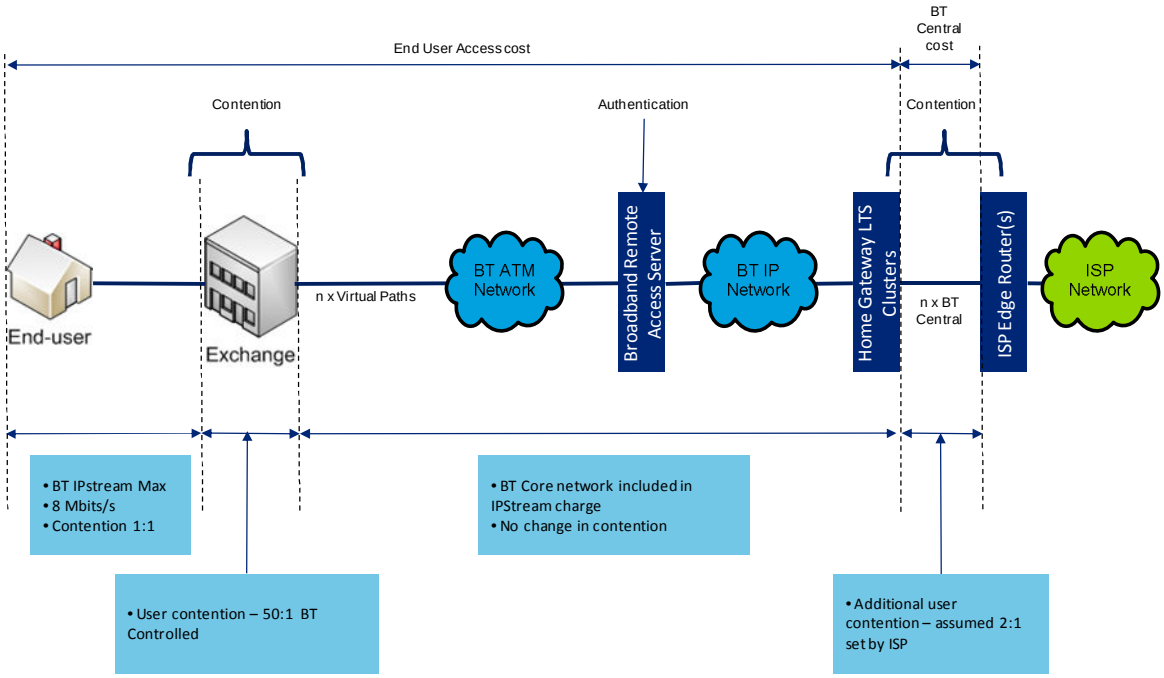

Within the BT IPstream network there are two components that contribute towards the cost[6]. Firstly there is the End User Access cost which is paid per user. This varies by End User product e.g. BT IPstream Home 2000 or BT IPstream Max. Second, there is the BT Central cost which varies based on the circuit size, e.g. 622Mbits/s, 155Mbits/s. By managing the number of users they allocate to a BT Central, an ISP can determine how many BT Centrals are required for their network and therefore the total cost of network infrastructure. P2P traffic, due to its high bandwidth consumption per user, reduces the number of users that can be allocated per BT Central, and increases the number of BT Centrals required to serve a set customer base size.

BT Wholesale products such as IPstream represent a large proportion of the UK ADSL market (BT Retail solely purchase BT wholesale), however ISPs supplying LLU products are growing in subscriber numbers. LLU enables an ISP to take the end user connection at the exchange, and terminate them straight onto their own network equipment. From here the ISP will backhaul the traffic through their own middle mile network infrastructure into one of their Points of Presence (PoPs). As the infrastructure within an LLU ISP is similar to that of IPstream, we can expect that P2P traffic would also pose capacity issues during peak traffic periods and as such LLU providers would see similar benefits if they were to remove illegal P2P from their network.

If left unmanaged, the additional traffic generated by P2P could result in increased cost for an ISP due to the additional network capacity required. However, our understanding, confirmed in discussions with industry and our own research of ISPs' Fair Usage Policies (FUP), is that in the last few years most ISPs have introduced traffic shaping and it is now widespread across the UK

[6] BT, IPstream price list. (*http://www.btwholesale.com/pages/static/service_and_support/service_support_hub/online_pricing_hub/SPPL_Page/part1_bt_IPstream.html*).

ISPs. Traffic management enables ISPs to actively manage individual subscriber traffic within its network. In practice, for P2P traffic, an ISP could have control over the amount of bandwidth that is allocated to each user session. We understand that ISPs restrict P2P during peak times but allow it to be unrestricted during non-peak times when there is available capacity. Therefore, this reduces the need to increase the total capacity of the network at peak times, helps maintain quality of service for standard users, and at the same time allows P2P to operate optimally during non-peak hours.

In the UK, Virgin Media is the only provider of cable services. Different technology is used to connect the end user into the ISP IP network compared to ADSL. The Virgin Media network is the first to implement a Next Generation Network (NGN) and by definition is expected to have excess capacity[7]. As a result P2P is not expected to have as much of an effect as it does on ISPs' ADSL based networks. Like the ADSL based ISPs, Virgin Media appear to employ traffic management and fair usage policies in the form usage and time based management[8].

Mobile operators are increasingly becoming significant players in the ISP market through providing mobile data access. There has been a notable increase in network congestion on their infrastructure[9] as a result of offering data services, particularly with the advent of smart phones such as Android based devices and the iPhone which provide an improved internet experience in comparison to phones of previous generations. Tablet devices with mobile data connectivity such as the iPad are also expected to have an impact on the amount of data required for downloads.

Despite serious congestion issues on mobile networks, usage of mobile networks for P2P is understood to be small. For a P2P user within the UK, the mobile network is apparently limited in several ways when compared to a fixed ISP:

- A P2P user is expected to download tens of gigabytes of data each month, where a typical mobile data access package offers only 3-5GB of data per month.
- The infrastructure is reliant on radio technology which provides users with reduced bandwidth speeds in comparison to a fixed line. Whilst High Speed Download Packet Access (HSDPA) services typically offer up to 7.2Mbits/s download speeds, this is greatly impacted by the number of users in the area and the physical makeup of the surroundings.
- Mobile data service providers also have traffic shaping mechanisms in place with strict fair usage policies.

As mobile technology moves towards 4G and beyond over the next three years or so, subject to spectrum becoming available, the bandwidths available to mobile devices will increase. It is expected that mobile operators will then be able to offer larger data packages (from the 3-5GB of today to 10-20GB as per fixed line providers) which may make the mobile network more attractive for P2P users. Alongside the 4G developments, as mobile handsets are increasingly used as

[7] Virgin Media, Virgin Media Launches the UK's Fastest Broadband. (http://pressoffice.virginmedia.com/phoenix.zhtml?c=205406&p=irol-newsArticle&ID=1235740&highlight).

[8] Virgin Media,Traffic management. (http://allyours.virginmedia.com/html/internet/traffic.html).

[9] Deloitte, "Telecommunications Predictions 2010".

modems, (allowing internet connectivity to your laptop through your mobile device) the opportunity for P2P users to use a mobile network for downloading content increases. P2P traffic is likely to then become an increasingly higher proportion of the traffic on a mobile network. However, it will be up to the mobile network provider to control this additional P2P traffic using traffic management alongside other traffic on the network.

Mitigating the impact of P2P on network cost: traffic management

By introducing traffic management, ISPs have been able to mitigate to some extent the cost associated with P2P traffic. An ISP may choose to completely disable P2P traffic during peak times or alternatively just restrict the bandwidth to a certain bit rate.

Traffic management, also known as traffic shaping is the control of computer network traffic in order to optimise or guarantee performance, improve latency and/or increase usable bandwidth by delaying packets that meet certain criteria. It provides the network operator, in this case the ISPs, with the ability to classify traffic and apply rules in such a way as to control and manage each application session.

Today's traffic management technology uses stateful deep packet inspection (DPI). DPI investigates the contents of packets and the stateful analysis validates each communication session to specify what type of traffic is passing through the ISP network[10]. Once the traffic type has been confirmed, it is typically assigned to a class and pre-defined rules are then applied to determine what should be done with that particular session. It is known that some applications use encryption techniques[11] in their sessions to enhance privacy and confidentiality. This could prevent ISPs from identifying P2P BitTorrent sessions. However, technology is advancing and certain encrypted session types can be read[12]. Deep packet inspection technology is offered by various vendors including Juniper Networks[13] and Cisco[14].

Traffic management is also applied on both upload and download sessions. Any ISPs that peer with (networks directly connect) other ISPs that do not apply traffic management will not be affected as they can control the incoming requests using their traffic management equipment.

Each ISP has their own FUPs for their broadband products which each user must agree to. There are four categories of traffic management – quota, time, rate limiting and priority. Our research indicates that ISPs generally apply either one of these, a combination of them or all:

---

[10] Stateful analysis implies that the technology tracks the communication session as a whole rather than stateless which investigates individual portions of the session at a point in time. As such, stateful analysis can be more effective in distinguishing between traffic types in comparison to stateless.

[11] BitTorrent Encryption. (http://www.bittorrent.com/btusers/guides/bittorrent-user-manual/appendix-bittorrent-mainline-interface/preferences/bittorrent)

[12] Cisco, "WAN and application optimization solution guide", April 2008.

[13] Juniper Networks, "Juniper Networks Intelligent Services Edge Solutions for Cable Operators", April 2010.

[14] Cisco, "Cisco SCE 8000 Service Control Engine", April 2010.

- Quota based traffic management appears to be applied alongside time based management. The most notable of these is the Virgin Media traffic management policy. This allows a user to download a certain volume of data (MB) over a certain period of time. Once this volume has been reached, the subscribers' network connection is throttled to a lower speed.

- Priority based traffic management groups traffic by class and applies a priority to the class. Typical classes or traffic would be email and web browsing versus Voice over IP (VoIP). Given the real-time nature of VoIP, it would be given a priority over the email and web browsing sessions, if the network was to become congested.

- Rate limiting traffic management provides an ISP with the ability to apply upper limits to the bit rate used by a particular application session. This also appears to be applied with time based management.

By applying traffic management, ISPs can preserve the quality of service for applications other than P2P. For example, cloud based services such as those provided through the web[15] can be prioritised above P2P to allow them to operate efficiently.

Traffic management technology could cost an ISP in the order of £6m[16] but in exchange gives ISPs control on the level of impact that P2P users have on network congestion and therefore cost on their network.

Some ISPs also pursue strategies to seek to better align costs to revenues. For example, some of the ISPs offer broadband products with varying degrees of traffic management applied at different prices. It is reasonable to expect that heavy P2P users may take advantage of these products with lower levels of traffic management and a higher level of service[17]. In this way, ISPs may be placed to better align network costs with revenues.

Future trends in usage and operator response

Content consumption through internet services is expected to increase over the next few years significantly increasing the total volume of data downloaded on the internet. According to Cisco, in 2013, Internet traffic will be nearly four times larger than it is in 2009[18].

---

[15] For example, Google Apps

[16] Based on a total of 8M subscribers, requiring 8 x Cisco SCE 8000s (each able to analyse 1M subscribers) at $77,000, and 8 x 1,000,000 subscriber licenses at $1 million each (30% discount of MSP), converted into GBP pounds at 0.66837.

[17] Plusnet, Traffic Prioritisation - Plusnet Pro Package with all Diamond & Gold prioritisation (http://www.plus.net/support/broadband/speed_guide/traffic_prioritisation.shtml).

[18] Cisco, "Hyperconnectivity and the Approaching Zettabyte Era", 9 June 2009.

Figure 2 – Source: Cisco Virtual Networking Index 2010 (UK) – Monthly Volume (Petabytes)

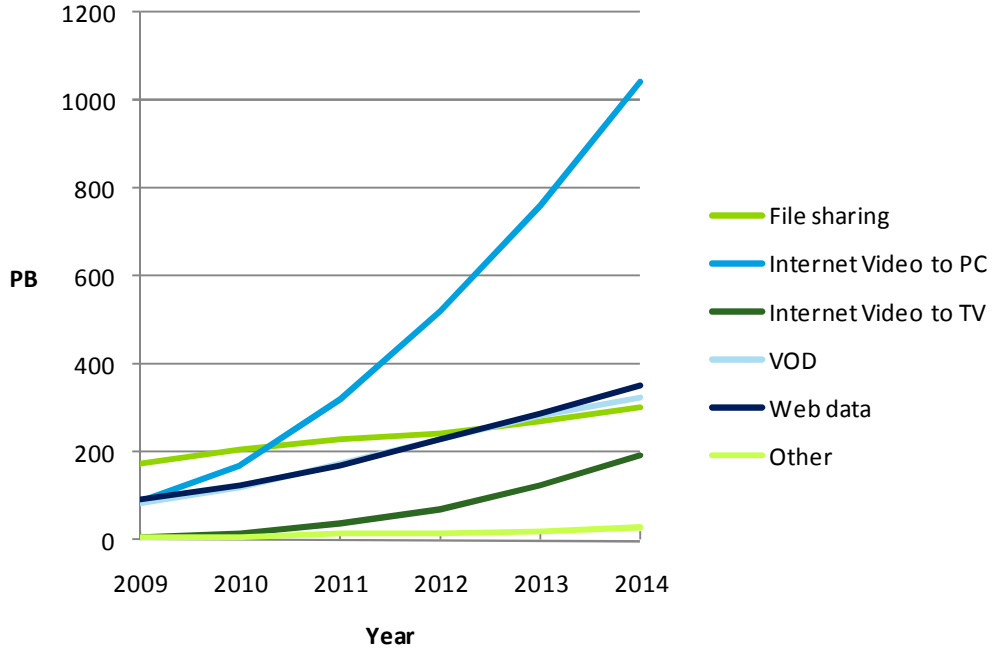

Source: Cisco Virtual Networking Index 2010 (UK)

The standard internet user usage profile is expected to shift towards Internet Video to PC services. P2P traffic (or file sharing, including both legal and illegal) will increase but Cisco believes that in 2010 in the UK, Internet Video to the PC will overtake P2P traffic in volume.

Overall, P2P file sharing was 38 percent of all global broadband traffic in 2009, down from 60 percent two years ago. While P2P is still growing in absolute terms it is growing more slowly than video streaming and other applications.[19]

Streaming, which includes video to PC, video to TV and VoD is therefore expected to place increasing pressure on an ISP's network. In this context, the ability of an ISP to manage its infrastructure becomes key and ISPs will have to carefully manage this demand for increase in capacity in order to maintain operational and financial performance.

With the advent of NGNs[20], Service Providers will be able to supply end users with new high speed services through advanced technology. NGN supports generalised mobility which will allow consistent and ubiquitous provision of services to users.[21]

[19] Highlights, Cisco, "Cisco Visual Networking Index: Usage Study", 21 October 2009.

[20] The International Telecommunications Union defines a NGN as "a packet-based network able to provide Telecommunication Services to users and able to make use of multiple broadband, QoS-enabled transport technologies and in which service-related functions are independent of the underlying transport-related technologies.

Overall the impact of P2P traffic on ISP network cost may well be lessened as network capacities increase with NGN. Next Generation Access (NGA) will replace existing communications access networks in order to deliver sufficient network capacity for the user to access all services available to them. However, these impacts are not yet clear and remain to be felt. As such, the focus of this paper is the impact on a switched network, the current policy question.

2.1 Estimating the impact on network congestion

We have estimated the cost saving impact that reducing illicit P2P traffic could have on certain types of ISPs. If an ISP was to remove all illicit P2P traffic from its network, the bandwidth consumption overall would decrease. This would have an impact on the required capacity of an ISP's network. The most notable time that this could have an effect is during peak periods of activity, typically between 6 and 10 pm. We have assumed that traffic management – a combination of rate limiting and prioritisation – is applied which reduces to some extent the cost impact that illicit P2P traffic would otherwise have.

In order to consider this question quantitatively, we have modelled the potential benefits of reducing illicit P2P traffic for ISPs using BT IPstream[22]. ISPs acquire BT Centrals in order to backhaul IPstream traffic into their network[23]. Our core modelling approach is shown below with the assumptions made set out in Annex A1.

[21] International Telecommunications Union, ITU-T's Definition of NGN. (http://www.itu.int/ITU-T/ngn/definition.html).

[22] As noted above, similar considerations hold for ISPs using a LLU business model.

[23] Within our model, we have also accounted for traffic management as it is now widely used across UK ISPs. Across all of our cases, we have applied P2P application session bit rate upper limits that would typically be applied during peak periods on medium level broadband packages from ISPs as well as prioritisation of P2P traffic against other standard traffic.

Figure 3 : Model approach

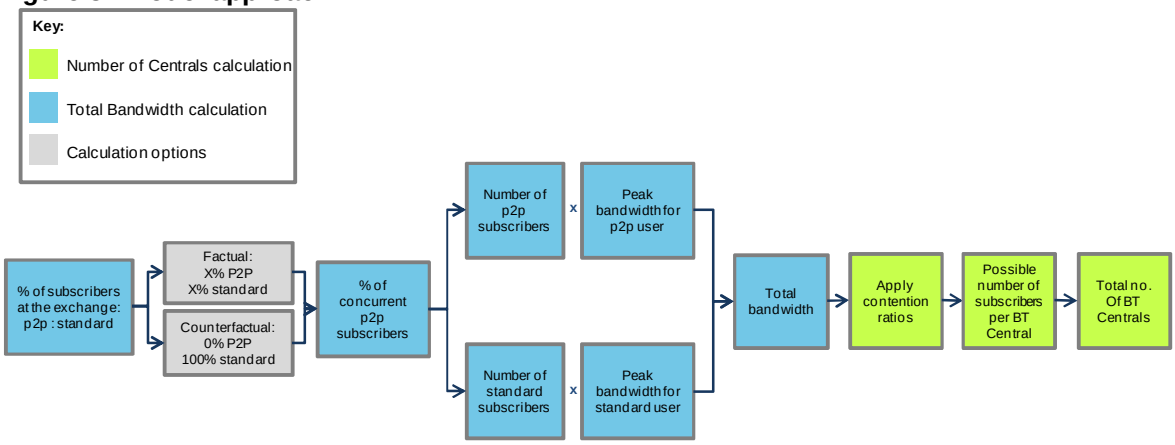

Our analysis suggests that tackling illicit P2P use could result in a cost saving of up to approximately £10 million across all ISPs who acquire BT IPstream. This cost saving assumes that the relevant ISPs would be able to remove BT Centrals from the network infrastructure.

Flexing the proportion of the customer base actively engaged in illicit P2P activity at any peak point in time (to 1.3% and 3.8% in our low and high cases respectively), and the extent to which P2P traffic is de-prioritised, our estimates suggest that savings could range between approximately £3m and £22m respectively.

In the absence of Government action ISPs could choose to remove P2P traffic. However, the extent to which the ISPs choose to do so needs to also take into account the potential revenue impact. If an ISP chose to cut this traffic while other ISPs continued to allow it, this could result in churn of some of the P2P user base. For example, if a single ISP of slightly over five million subscribers (approximate number of BT Retail subscribers[24]) was to stop illicit P2P traffic, and assuming that one quarter of the 16% illicit P2P users switched to other ISPs, this could result in revenue loss of approximately £36 million per year[25]. Smaller ISPs' potential revenue loss from unilaterally stopping illicit P2P would, of course, be smaller.

[24] Enders Analysis, "UK broadband and telephony trends to December 2009", March 2010.

[25] Based on a cost of £15 per package of a total of 200,000 subscribers (25% of 16% of slightly over five million).

Appendix A Modelling assumptions

The assumptions in this report are taken from various sources. Where no data was available, we have based the assumptions on our industry knowledge and discussions with industry stakeholders.

In our central case, we have assumed that 16% of internet users are P2P users[26], but only approximately 2.4% of the customer base (15% of the P2P population) are actively engaged in P2P activity at any peak point in time within the network. In the counterfactual we assume that there is no illicit P2P activity. In our low and high case we have flexed the proportion of internet users that are illicit P2P users to 13% and 19% respectively, and accordingly the proportion of the customer base that is actively engaged in illicit P2P activity at any peak point in time. The 13% estimate is derived from research reported by Ofcom[27]. The 19% estimate is based on BIS who reports 6.5m individuals consume pirated content[28].

We have then estimated the typical peak bandwidth usage of a P2P illegal downloader versus a standard user at the exchange. For our standard user, we have assumed a peak bandwidth usage of 46.27 Kbits/s based on web browsing, email, streaming video and gaming. For illicit P2P users we have assumed a maximum of 128.52 Kbits/s for P2P applications, assuming traffic management is applied[29]. We have assumed that prioritisation is also applied to the P2P traffic alongside rate limiting traffic management. As P2P data has a lower priority on the network in comparison to other traffic we have assumed that the P2P traffic bit rate will be further lowered. For our central case we have assumed a 50% further reduction. The total P2P bandwidth is added to standard user usage to get a final bandwidth of 110.53Kbit/s for an illicit P2P user. In our low and high case we assume 30% and 70% of total maximum illicit P2P bandwith due to prioritisation, giving 84.83 Kbits/s and 136.24 Kbits/s bandwidth usage respectively for a P2P user.

Having calculated the number of illicit P2P and standard users at the exchange, we have estimated the total bandwidth that is expected during peak periods for each of the user groups. Based on the total bandwidth consumption and applying ISP contention principles[30], we have then estimated the number of users that could be allocated to a single BT Central (of 622Mbit/s) in the presence and

[26] This is based on estimates by BPI/Jupiter research. BIS Consultation on legislation to address illicit peer-to-peer file sharing, 16 June 2009, page 100 Annex G.

[27] Ofcom Communications Report, August 2009, Convergence Chapter (based on research by Entertainment Research), taking only the proportion of internet users who claim to fileshare unauthorised movies/TV either regularly or occasionally, and excluding internet users who report doing so rarely.

[28] BIS, Impact Assessment for the Digital Economy Bill, November 2009.

[29] As per ISP published rate limiting traffic management policies.

[30] ISP networks rely heavily on contention to make them profitable. Contention reflects the number of users that compete for a certain amount of bandwidth at any point in time. Contention within a BT IPstream network is applied at two locations. Firstly at the exchange into the ATM network through Virtual Paths. Secondly, at the BT Central connecting the BT IP network into the ISP network. The actual contention rates that are applied at these locations vary between ISPs and are not publicly available. For the purposes of this study, based on industry knowledge, we have assumed contention of 50:1 at the exchange and 2:1 at the BT Central.

absence of illicit P2P traffic. Fewer users can be allocated to a single BT Central in the presence of illicit P2P use. This means that more BT Centrals may be purchased than would be the case without P2P (assuming the subscriber base of 8,044,400[31] BT IPstream subscribers remains constant) [32].

Within our model, we have:

- Assumed that the size of all BT Centrals is 622Mbits/s[33] (636,928Kbits/s).
- Built the model around product allocation of IPstream Max which provides speeds of up to 8 Mbits/s (8,192 Kbits/s)[34]. We have taken the cost of a BT Central from BT published regulated prices.

The tables below contain the assumptions that underpin our modelling of network cost savings.

Assumptions: Network cost savings

	Baseline	Central	Low	High
Available bandwidth				
BT Central – 622 Mbit/s in Kbits/s	636,928	636,928		
Number of BT Centrals	1	1		
IPstream Max product download speed in Kbits/s	8,192	8,192		
Contention				
Users at the exchange into the Virtual Paths	50:1[35]	50 : 1		
Users at the BT Centrals	2:1	2 : 1		
User profiles				
% of illicit P2P users out of total internet users	0%	16%	13%	19%
% of concurrent active illicit P2P users	0%	15%	10%	20%
Costs				
Cost per 662Mbits/s BT Central pm	£85,743[36]	£85,743		

[31] Enders Analysis, "UK broadband and telephony trends to December 2009", March 2010. As BT currently has 8,044,400 BT Wholesale DSL subscribers, we are assuming that these are of the BT IPstream product- although it may be the case that some of these are DataStream.

[32] Our modelling is based on assuming that all customers are on one single hypothetical ISP network. As in practice the customer base is split across multiple networks, the efficiency gains would not be consolidated into a single group of BT Centrals but across multiple separately owned groups of BT Centrals. This means that not all estimated BT Centrals may in practice be avoided, although the availability of lower size BT Centrals would facilitate achieving the estimated cost savings.

[33] Smaller circuit sizes also exist – 10Mbits/s, 34Mbits/s, 155Mbits/s. In practice, assuming all ADSL ISPs use a larger size of pipe is likely to be conservative as the price per user of a larger pipe is likely to be smaller.

[34] 8Mbits/s service is the speed offered by ISPs that use IPstream. Other speeds are available – 1Mbits/s, 2Mbits/s but these are not common.

[35] 50:1 is based on the contention ratios that were first publicised when BT offered their ADSL services. See - http://usertools.plus.net/tutorials/id/11

[36] BT, IPstream price list. (*http://www.btwholesale.com/pages/static/service_and_support/service_support_hub/online_pricing_hub/SPPL_Page/part1_bt_IPstream.html*)

BT IPstream Max access cost per user pm	£6.43	£6.43
BT Central rental per user pm	£0.865	£0.865
Number of BT IPstream subscribers	8,0044,400	8,044,044

Assumptions: Bandwidth usage by traffic type, illicit P2P and standard users

			Central	Low	High
Traffic type	File size	Usage	File Size (per mnth)	File Size (per mnth)	File Size (per mnth)
Standard User					
Web Browsing	5MB per hour	3 hours per day	450	450	450
Standard Video stream (1Hour)	280MB per video	5 videos per month	1400	1400	1400
Hi-Def stream (1Hour)	330MB per video	2 videos per month	660	660	660
Email	250KB per email (allowing for attachments)	20 emails per day	5	5	5
Gaming	15MB per hour	1 hour per day	450	450	450
Music	6MB per song	20 songs per month	120	120	120
Total (MB)			3085	3085	3085
			Bandwidth	Bandwidth	Bandwidth
Average bandwidth (Mbits/s)			0.01	0.01	0.01
Average bandwidth (Kbits/s)			9.75	9.75	9.75
Total MB per day (MB)			102.83	102.83	102.83
Assume 75% downloaded between 6-10pm			77.12	77.12	77.12
Peak bandwidth (Mbits/s)			0.04	0.04	0.04
Peak bandwidth (Kbits/s)			43.87	43.87	43.87
Upload peak bandwidth (Kbits/s)			2.40	2.40	2.40
Peak bandwidth (Kbits/s) (Incl. Upload)			46.27	46.27	46.27
Traffic type	File size	Usage	File Size (per mnth)	File Size (per mnth)	File Size (per mnth)
Illicit P2P User					
P2P	1.62 GB per hour (3.6 Mbits/s)	5 hours per day	243000	243000	243000
			Bandwidth	Bandwidth	Bandwidth
Average bandwidth (Mbits/s)			0.75	0.75	0.75
Average bandwidth (Kbits/s)			768.00	768.00	768.00
Peak bandwidth (Kbits/s)			3584	3584	3584
Upload peak bandwidth (Kbits/s)			196	196	196
Peak bandwidth (Kbits/s) (Incl. Upload)			3780	3780	3780
Traffic management applied - Bit Rate			3.4%	3.4%	3.4%
Total P2P Peak bandwidth- with Bit Rate Traffic Management			128.52	128.52	128.52
Traffic management applied - Prioritisation			50%	30%	70%
Total P2P Peak bandwidth- with Prioritisation Traffic Management			64.26	38.56	89.96
Total P2P + Standard user bandwidth			110.53	84.83	136.24