Chapter II, Competition Act 1998
Article 102, Treaty on the Functioning of the European Union

Decision of The Office of Communications

CW/1103/03/13: Complaint from TalkTalk Group against BT about alleged margin squeeze in relation to superfast broadband pricing

Non-confidential

Issue date: 21 October 2014

About this document

In March 2013, Ofcom received a complaint from TalkTalk Group alleging that BT was abusing a dominant position, by operating a margin squeeze on its superfast broadband products. This document sets out Ofcom's reasons for its decision that there are no grounds for action following its Competition Act 1998 investigation into this allegation. It explains the context of Ofcom's decision, the facts on which Ofcom bases its decision and the legal and economic analysis that leads it to conclude that there are no grounds for action in this case. This document is a notice for the purpose of Rule 10(4) of the Competition Act 1998 (Competition and Markets Authority's Rules) Order 2014.

Contents

Section 1

Executive Summary

Ofcom's findings

1.1 This document sets out Ofcom's reasons for its decision that there are no grounds for action in relation to its investigation of an alleged margin squeeze by BT Group plc (BT) in relation to superfast broadband (SFBB) pricing.

1.2 On 13 March 2013 Ofcom received a formal complaint (the complaint), from TalkTalk Telecom Group plc (TalkTalk) alleging that BT was abusing a dominant position contrary to the Chapter II prohibition in section 18 of the Competition Act 1998 (the Act) and Article 102 of the Treaty on the Functioning of the European Union (TFEU).

1.3 TalkTalk alleged that BT was operating an abusive margin squeeze by failing to maintain a sufficient margin between the prices it charged its competitors for wholesale SFBB access products and the prices it charged for retail SFBB products, such that an equally efficient operator would be unable to compete in the retail provision of SFBB products.

1.4 On 1 May 2013, Ofcom determined that it had reasonable grounds to suspect that BT had infringed the Chapter II prohibition and/or Article 102 by abusing a dominant position and opened an investigation into BT's alleged margin squeeze conduct.

1.5 On 21 May 2013, TalkTalk submitted a supplementary submission (the TalkTalk supplementary submission) setting out its view that changes to BT's retail SFBB products since the complaint had "intensified" the margin squeeze.[1] The changes related to an offer made by BT in May 2013 reducing the price of one of BT's 'Infinity' SFBB products and including from August 2013 'free' premium television sports content (BT Sport) with its SFBB products.[2] On 18 June 2013, Ofcom notified BT and TalkTalk that it considered these matters should properly be considered as part of the investigation.

1.6 Ofcom's approach to assessing whether BT may have abused a dominant position was to analyse whether the margin between BT's upstream and downstream prices for particular SFBB offers (the February 2013, May 2013 and January 2014 offers) was sufficient to cover its downstream costs.

1.7 As BT's SFBB offer changed over the period of our assessment, we have presented the results separately for the periods covered by the February 2013 offer, the May 2013 offer and the January 2014 offer. In relation to the May 2013 offer and the January 2014 offer we also take into account the 'net costs' of providing BT Sport to BT's SFBB customers.

1.8 In relation to all three offers, we considered BT's margins on its entire SFBB portfolio, including all Infinity and SFBB Plusnet products, and all additional products and services included in bundles except BT Sport. First we calculated BT's revenues and ongoing and upfront costs per customer, and the monthly margin BT would make on

[1] TalkTalk supplementary submission (confidential), 21 May 2013, page 3, paragraph 8.
[2] TalkTalk supplementary submission (confidential), 21 May 2013, pages 9 to 24, sections 3.2 and 3.3.

each SFBB customer. We then determined whether BT would recover its upfront costs over a reasonable average customer lifetime.

1.9 For the February 2013 offer this resulted in an average positive monthly 'headroom' per SFBB customer of £[✂] over the customer lifetime. In other words, BT's February 2013 offer would only fail to recover its upfront costs over an average SFBB subscriber customer lifetime if BT's ongoing monthly margin fell by £[✂] per customer per month.

1.10 For the May 2013 and January 2014 offers, having assessed the available monthly headroom under our margin squeeze methodology, we calculated the total costs of BT Sport less BT's direct revenues from BT Sport (which we termed the 'net costs of BT Sport') and considered how these costs should be recovered for the purposes of this investigation. We identified a number of possible approaches, which we refer to as the 'combinatorial approach', the 'first allocation approach' and the 'second allocation approach'.

1.11 We considered that if BT passes on the first and second allocation approaches, we could be confident that it would pass on the combinatorial approach as well. We therefore focussed our assessment on the first and second allocation approaches.

1.12 We present the results of our assessment of BT's margins on its SFBB portfolio for the May 2013 offer and the January 2014 offer using both the first and second allocation approaches. The first allocation approach resulted in a positive monthly margin for the May 2013 offer of £[✂] and a positive monthly margin for the January 2014 offer of £[✂]. The second allocation approach resulted in a positive monthly margin for the May 2013 offer of £[✂] and a positive monthly margin for the January 2014 offer of £[✂]. In view of these results, we have not carried out a combinatorial test for the purposes of this no grounds for action decision.

1.13 Table 1.1 illustrates our headline findings.

Table 1.1: Summary of findings on SFBB average monthly margins per customer in relation to the February 2013, May 2013 and January 2014 offers

	Headroom per SFBB customer before BT Sport	Net cost of BT Sport per SFBB customer using first and second allocation approaches	Margin after BT Sport using first and second allocation approaches
February 2013 offer	£[✂]	N/A	N/A
May 2013 offer	£[✂]	£[✂] - £[✂]	£[✂] - £[✂]
January 2014 offer	£[✂]	£[✂] - £[✂]	£[✂] - £[✂]

1.14 On this basis, Ofcom considers that it does not have sufficient evidence to support a finding that BT's conduct amounts to an abusive margin squeeze in relation to the provision of BT's SFBB products. Given that we have found that BT has sufficient margin to cover its downstream costs (such that an EEO would be able to compete with BT), Ofcom has not made a further separate assessment of whether any margin squeeze could have had actual or potential anti-competitive effects.

1.15 Therefore, Ofcom concludes that it has no grounds for action under Article 102 or Chapter II of the Act in relation to BT's alleged margin squeeze.

Document structure

1.16 This document's structure is as follows:

i) Section 2 – sets out the background to the investigation, gives details of the target and the complainant, explains the retail SFBB market and BT's product range, provides background on BT Sport, and explains technical aspects of the wholesale SFBB access market. It then gives detail of the complaint and Ofcom's investigation.

ii) Section 3 – sets out the legal framework for the investigation.

iii) Section 4 – considers relevant markets and BT's position in those markets.

iv) Section 5 – sets out the methodology we have used to assess BT's margins on its SFBB products in relation to the SFBB portfolio exclusive of BT Sport. We consider each of these aspects in turn:

a) what is a margin squeeze;

b) the appropriate imputation test in this case;

c) the appropriate cost standard to use in this case;

d) the relevant output increment for our analysis;

e) the treatment of shared costs in this case;

f) the wholesale products we have included in the test;

g) elements of the cost and revenue stack; and

h) the method we have used to assess profitability.

v) Section 6 – sets out our methodology for incorporating the costs and revenues of BT Sport into our margin squeeze assessment for the May 2013 offer and the January 2014 offer. In this section we:

a) set out some evidence about BT's strategy in relation to BT Sport;

b) explain why we consider the net costs approach to be an appropriate basis for calculating the costs of offering BT Sport to BT's broadband subscribers;

c) explain how we calculate the BT Sport net costs in this case; and

d) explain how we have approached the recovery of the net costs of BT Sport in this case.

vi) Section 7 – sets out the results of Ofcom's margin squeeze assessment.

vii) Annex 1 – sets out in more detail the results of our cost and revenue assessment of the SFBB portfolio without BT Sport.

viii) Annex 2 – considers shared costs in more detail.

ix) Annex 3 – sets out in more detail how we calculated the net costs of BT Sport.

x) Annex 4 – is a glossary of terms used in this decision.

Section 2

Background

2.1 On 13 March 2013, Ofcom received a complaint from TalkTalk alleging that BT was abusing its dominant position in relation to its pricing of SFBB products. Having determined that it had reasonable grounds to suspect that BT had abused a dominant position, Ofcom opened an investigation on 1 May 2013, in its role as a concurrent competition regulator in the UK, and in exercise of its concurrent powers under the Act.

The target

2.2 BT is the listed holding company for an integrated telecommunications group that provides voice and data services in the UK and elsewhere. Its activities include networked IT services, local, national and international telecommunications services, and higher value broadband and internet products and services. In the financial year to March 2013, BT had a UK turnover of over £14 billion.[3]

2.3 British Telecommunications plc is a wholly-owned subsidiary of BT and encompasses virtually all businesses and assets of the BT Group. It is made up of four principal lines of business:

i) BT Global Services is a provider of networked IT products, services and solutions, serving multi-site organisations worldwide;

ii) BT Wholesale runs BT's commercial networks and provides network services and solutions to around 700 UK communications providers (CPs) through a portfolio of broadband, voice and data, connectivity services and the interconnection of traffic across other service providers' networks and managed network solutions;

iii) BT Retail serves SME and residential customers in the UK and is the prime channel to market for other BT businesses.[4] BT Consumer and BT Business are the divisions within BT Retail that market broadband, including the BT Infinity SFBB products, to residential and commercial customers;[5] and

iv) Openreach is responsible for operating BT's local access network that connects CPs' customers to their local telephone exchange. Openreach is the division within BT that supplies wholesale local access products, including local fibre access, to CPs seeking to offer standard broadband (SBB) and SFBB services.

[3] BT results for year to 31 March 2013 recorded in Annual Report 2013, page 51, http://www.btplc.com/Sharesandperformance/Annualreportandreview/pdf/2013_BT_Annual_Report.pdf

[4] Since Ofcom launched the investigation, BT announced that it would split BT Retail into two separate businesses, BT Consumer and BT Business, from September 2013. BT expected that it would continue to report figures for BT Retail as a whole until the end of the 2013/2014 financial year. http://www.btplc.com/news/Articles/ShowArticle.cfm?ArticleID=68268030-3B15-4603-A6C8-7F2437114344

[5] BT Consumer also markets broadband products under the Plusnet brand.

Openreach is a functionally separate division within BT and was created as a result of binding undertakings given by BT to Ofcom in 2005.[6]

2.4 Supporting these four divisions is BT Technology, Service & Operations (BT TSO) which is responsible for the design and deployment of the platforms, systems and processes that support BT products and services as well as managing BT's voice, data and TV networks and IT applications which make up the core infrastructure for BT's products and services.

2.5 Plusnet plc (Plusnet) is a broadband business acquired by BT in 2006. It provides retail voice and broadband services to consumers and businesses. It is marketed by BT Consumer as a separate value brand.[7]

The complainant

2.6 TalkTalk, previously the telecommunications arm of Carphone Warehouse, is an integrated telecommunications group that provides voice and data services in the UK. In the financial year to March 2013, TalkTalk had a UK turnover of £1.67 billion.[8] At March 2013, it operated in 2,724[9] BT exchanges providing unbundled SBB and SFBB products to around 4 million customers.[10] At the time of its complaint, TalkTalk was technically able to offer superfast products from 1,359 of the 1,366 BT exchanges capable of supporting superfast products.[11]

Retail SFBB

The fixed line retail SFBB market

2.7 SFBB products provide customers with a permanent or always on connection to the internet that operates without interfering with voice calls. Broadband products are considered to be 'superfast' where they provide download speeds of at least 30Mbit/s. Fixed line products are distinguished from mobile products, in that they use fixed access networks to supply internet services to a particular premises.

2.8 Using new technology and an increased use of fibre optic infrastructure, retail broadband providers began, in 2010, to market superfast products to their customers. As of March 2013, when TalkTalk's complaint was submitted, there were around 3.8 million SFBB connections in the UK, which represented 17.5 per cent of total broadband connections.[12] The take-up of SFBB services has risen rapidly since 2011[13] and has continued to grow during this investigation.[14]

---

[6] These undertakings were provided in lieu of a market investigation reference to the Competition Commission and place a number of obligations on BT intended to ensure non-discriminatory local network access, see September 2013 Consolidated version of the Undertakings given to Ofcom by BT pursuant to the Enterprise Act 2002, http://stakeholders.ofcom.org.uk/binaries/telecoms/policy/bt/consolidated.pdf.
[7] BT Annual Report 2013, pages 32 and 167.
[8] TalkTalk Group results for financial year to 31 March 2013 recorded in Annual Report 2013, page 74, http://www.talktalkgroup.com/~/media/Files/T/TalkTalk/pdfs/reports/2013/ar-2013.pdf.
[9] TalkTalk Group Annual Report 2013, page 2.
[10] TalkTalk Group Annual Report 2013, page 4.
[11] TalkTalk complaint (confidential), 13 March 2013, page 8, paragraph 7.
[12] 2013 Ofcom Communications Market Report, page 322, http://stakeholders.ofcom.org.uk/binaries/research/cmr/cmr13/2013_UK_CMR.pdf.
[13] 2013 Ofcom Communications Market Report, page 323.

2.9 A key driver of the recent increase in SFBB take-up is Virgin Media's upgrade of its cable-based broadband network and its decision to automatically increase the speed of many of its broadband products to superfast speeds. [15] In March 2013, Virgin Media had 2.5 million SFBB connections[16] and this had risen to 3.2 million by January 2014.[17] As of March 2013, 1.3 million SFBB customers were served by BT.[18] As of December 2013 this had grown to 1.9 million.[19]

2.10 Other retail broadband providers, including TalkTalk and Sky, have also been marketing SFBB. At the time of the complaint, the number of SFBB customers served by these providers was relatively low, but was increasing over time.[20] In December 2013, TalkTalk served 177,000[21] SFBB customers which increased from 73,000[22] SFBB customers in March 2013.

BT's retail SFBB product range from February 2013

2.11 BT launched its retail SFBB portfolio under the Infinity brand in June 2010. Initially, it offered services on a single-product basis[23] (i.e. broadband access only without inclusive voice calls) before introducing dual-play bundles (i.e. including voice calls) in September 2010 and triple-play bundles (including voice and pay TV services) in April 2011.[24]

2.12 Although BT has varied the composition of its bundles as well as the range of inclusive features, it has since February 2013 offered a largely consistent range of five distinct core fixed line retail SFBB products:

i) Infinity 1, offering a download speed of 38Mbit/s, an upload speed of 9.5Mbit/s and a monthly download limit of 40GB.[25] On 4 January 2014 BT reduced the upload speed to 2Mbit/s and reduced the monthly download limit to 20GB[26] for new customers;

---

[14] By June 2013, 22 per cent of total UK broadband connections were SFBB connections, 2013 Ofcom Infrastructure Report, page 26, http://stakeholders.ofcom.org.uk/binaries/research/telecoms-research/infrastructure-report/IRU_2013.pdf.
[15] 2013 Ofcom Communications Market Report, page 322.
[16] 2013 Ofcom Communications Market Report, page 323.
[17] Virgin Media, Q4 Results 2013, page 3, http://phx.corporate-ir.net/External.File?item=UGFyZW50SUQ9MjIwNTUxfENoaWxkSUQ9LTF8VHlwZT0z&t=1
[18] BT Annual Report 2013, page 7, http://www.btplc.com/Sharesandperformance/Annualreportandreview/pdf/2013_BT_Annual_Report.pdf
[19] BT Q3 2013 - 14 results, page 7, http://www.btplc.com/News/ResultsPDF/q314-release.pdf
[20] 2013 Ofcom Communications Market Report 2013, page 324.
[21] TalkTalk group, Interim Management Statement – Third Quarter FY 2013/14, page 1, http://www.talktalkgroup.com/~/media/Files/T/TalkTalk-Group/pdfs/results/q3-ims-2014.pdf
[22] Talktalk Group, Preliminary results for the 12 months to 31 March 2013 (FY13), page 5, http://www.talktalkgroup.com/~/media/Files/T/TalkTalk-Group/pdfs/reports/2013/prelim-results-2013.pdf
[23] BT withdrew single product Infinity offers in September 2011.
[24] In the period we have considered, SFBB Infinity services were available only in dual-play and triple-play bundles.
[25] BT's response to 6th s26 Notice, Q1, 18 October 2013.
[26] BT's response to 9th s26 Notice, Q1, 21 February 2014.

ii) Unlimited Infinity 1, an unlimited product (i.e. with no download limit) offering a download speed of 38Mbit/s and an upload speed of 9.5Mbit/s;[27]

iii) Infinity 2, an unlimited product, offering a download speed of 76Mbit/s and an upload speed of 19Mbit/s;[28]

iv) Infinity 3, an unlimited fibre to the premises (FTTP)-only product offered to 'selected areas' with a download speed of 160Mbit/s and an upload speed of 20Mbit/s;[29] and

v) Infinity 4, an unlimited FTTP-only product offered from July 2013 to selected areas with a download speed of 300Mbit/s and an upload speed of 20Mbit/s.[30]

BT's products and prices between February 2013 and May 2013

2.13 In February 2013 BT updated its portfolio of dual-play Infinity products. BT's February 2013 prices are summarised in Table 2.1. We refer to this as the 'February 2013 offer'.

Table 2.1: BT Infinity prices between February 2013 and May 2013

Dual Play product		Infinity 1	Unlimited Infinity 1	Infinity 2	Infinity 3
Date	**Feature**				
1 Feb 2013 – 8 May 2013	Headline price per month	£18.00	£23.00	£26.00	£35.00
	Activation fee (one-off)	£25	n/a	n/a	n/a
	Line rental per month	£15.45	£15.45	£15.45	£15.45
	Introductory offers	£9 for first 3 months	£16 for first 3 months	£20 for first 3 months	n/a

Source: BT[31]

2.14 Dual-play products prior to 19 April 2013 were offered with a calls package that included free off-peak (evening and weekends) calls. From 19 April, BT removed inclusive evening calls from the Infinity 1, Unlimited Infinity 1 and Infinity 2 offers for new customers and instead offered a voice package with free weekend only calls.[32] New Infinity 3 customers continued to be offered free off-peak calls.[33]

[27] BT's response to 6th s26 Notice, Q1, 18 October 2013.
[28] BT's response to 6th s26 Notice, Q1, 18 October 2013.
[29] BT's response to 6th s26 Notice, Q1, 18 October 2013.
[30] BT's response to 6th s26 Notice, Q1, 18 October 2013.
[31] BT's response to 6th s26 Notice, Q1, 18 October 2013.
[32] For existing customers, the removal of inclusive evening calls was phased over three releases on 17 May, 28 June and 18 October. Source: BT's response to 6th s26 Notice, Q1, 18 October 2013.
[33] BT's response to 6th s26 Notice, Q1, 18 October 2013.

2.15 In addition, the packages included the following features:[34]

- unlimited access to BT's Wi-Fi hotspot network (in return for using this service, customers agree to allow BT to use their Home Hub routers and part of their bandwidth to provide public hotspots);
- use of BT's SmartTalk application which allows smart phone users to make VOIP calls which will be charged as if the customer was using their home phone;
- use of BT Family Protection which uses McAfee software to provide internet content filters;
- an inclusive Home Hub 3 Wi-Fi router;
- 2GB of capacity in BT's Cloud data storage facility;
- use of BT's anti-virus and malware protection software, NetProtect Plus; and
- a £50 Sainsbury voucher for orders transacted online through BT.com (however this voucher was not offered continuously from February 2013 and instead the voucher amount varied from month to month).

BT's products and prices between May 2013 and January 2014

2.16 In May 2013, BT announced that from August 2013 it would be offering BT Sport, a new package of premium sports television channels, as an inclusive feature with SBB and SFBB products. BT Sport is described in more detail from paragraph 2.23.

2.17 In May 2013, BT also reduced the price of its Infinity 1 product by £3 for the first 12 months while maintaining the weekends-only inclusive calls package for Infinity 1, Unlimited Infinity 1 and Infinity 2 bundles. On 1 June 2013, BT upgraded the Home Hub component of its offers, providing new customers with the more advanced Home Hub 4 router.[35] Otherwise, BT continued to offer the same inclusive features as it had from February 2013.

2.18 During this period, BT also introduced BT Infinity 4, a 300Mbit/s product available to selected areas. This was offered as part of a dual-play bundle on similar terms to Infinity 3 and, in particular, included free off peak calls.

2.19 BT's May 2013 prices are summarised in Table 2.2. We refer to this as the 'May 2013 offer'.

[34] BT's response to 6th s26 Notice, Q1, 18 October 2013.
[35] BT's response to 6th s26 Notice, Q1, 18 October 2013.

Table 2.2: BT Infinity prices between May 2013 and January 2014

Dual Play product		Infinity 1	Unlimited Infinity 1	Infinity 2	Infinity 3	Infinity 4
Date	**Feature**					
9 May 2013 – 3 Jan 2014	Headline price per month	£18.00	£23.00	£26.00	£35.00	£50.00
	Activation fee (one-off)	£30	£30	n/a	n/a	n/a
	Line rental per month	£15.45	£15.45	£15.45	£15.45	£15.45
	Introductory offers	£15 for first 12 months	£16 for first 3 months / £20 for first 12 months	£20 for first 3 months	n/a	n/a

Source: BT[36]

BT's products and prices after January 2014

2.20 In January 2014, BT increased its monthly line rental to £15.99. It also introduced charges for certain previously inclusive call features: BT Privacy with Caller Display and the BT Answer 1571 answer phone service. Access to each of these features was charged at £1.50 per month.[37] Other features of the Infinity product range for new customers were largely unchanged.

2.21 BT's January 2014 prices are summarised in Table 2.3. We refer to this as the 'January 2014 offer'.

[36] BT's response to 6th s26 Notice, Q1, 18 October 2013.
[37] BT's response to 9th s26 Notice, Q1, 21 February 2014.

Table 2.3: BT Infinity prices from January 2014

Dual Play product		Infinity 1	Unlimited Infinity 1	Infinity 2	Infinity 3	Infinity 4
Date	**Feature**					
4 Jan 2014 – present	Headline price per month	£18.00	£23.00	£26.00	£35.00	£50.00
	Activation fee (one-off)	£30	£30	n/a	n/a	n/a
	Line rental per month	£15.99	£15.99	£15.99	£15.99	£15.99
	Introductory offers	£7.50 for first 6 months then £15 for the next 12 months	£16 for first 3 months	£20 for first 3 months	n/a	n/a

Source: BT[38]

2.22 In addition to the Infinity products described above, BT also offered SFBB products under the Plusnet brand, which is wholly owned by BT Group. Details of Plusnet's SFBB offers are provided in Annex 1.

BT Sport

Introduction

2.23 From late 2012, BT acquired rights to broadcast a variety of live and exclusive sports fixtures. In particular, in June 2012, BT secured exclusive rights to broadcast live 38 Barclays Premier League matches in the 2013/14, 2014/15 and 2015/16 seasons, [39] and in July 2013, BT acquired rights to broadcast live FA Cup matches.[40]

2.24 In early 2013, BT announced the launch of its premium sports channels, BT Sport 1, BT Sport 2, BT Sport 1 HD, BT Sport 2 HD and ESPN (the latter after acquiring ESPN (UK), ESPN Inc.'s UK and Ireland TV business)[41]. On 9 May 2013, BT

[38] BT's response to 9th s26 Notice, Q1, 21 February 2014.
[39] FAPL Press Release, "*Premier League announces audio-visual rights*", 13 June 2012, http://www.premierleague.com/en-gb/news/news/2012-13/jun/premier-league-announces-audio-visual-rights.html
[40] BT Press Release, "*BT Sport wins joint FA Cup rights*", 17 July 2013, http://home.bt.com/news/sportnews/bt-sport-wins-joint-fa-cup-rights-11363816257650
[41] ESPN Press Release, "*BT Group acquires ESPN's UK & Ireland TV business*", 25 February 2013, http://www.espn.co.uk/football/sport/story/194804.html#UfJojMgUE4PlEshX.99

announced that its broadband customers would be able to access its BT Sport package in standard definition free of charge from its launch on 1 August 2013. [42]

2.25 In November 2013, BT announced that it had secured exclusive rights to broadcast live UEFA Champions League and Europa League matches for three seasons from 2015/16 to 2017/18.[43]

2.26 BT Sport has also acquired broadcast rights in relation to a growing number of sports events and other programming, including Aviva Premiership Rugby, WTA women's tennis, MotoGP, UFC World Championship and NBA basketball, among others.

BT Sport distribution

2.27 BT offers BT Sport across a number of platforms and distribution channels.

BT TV

2.28 BT TV is only available to BT broadband customers. BT TV is operated across two platforms. Cardinal is BT's legacy digital terrestrial television (DTT) platform which is provided through BT Vision set top boxes. YouView is BT's new platform which uses a combination of DTT and Multicast (content distributed via broadband) services.

2.29 BT Sport is provided through BT TV. BT TV customers using the Cardinal platform can access BT Sport 1 and BT Sport 2 (but not ESPN) via DTT. In January 2014 BT ceased to offer this platform to new customers subscribing on and after 25 January 2014.[44] BT TV customers using the YouView platform can access BT Sport 1, BT Sport 2 and ESPN, which are distributed by Multicast only.

2.30 BT TV customers cannot access BT Sport unless they already have, or take out, a contract with at least 12 months to run on their BT broadband product.

British Sky Broadcasting Group plc (Sky)

2.31 Sky operates a UK-wide open digital satellite (DSAT) platform which content providers, such as BT, can gain access. BT self-retails BT Sport across the platform to BT broadband customers or as a standalone pay TV product to other customers.

Virgin Media Inc (Virgin Media)

2.32 BT wholesales BT Sport content to Virgin Media, which in turn re-sells the channels as part of its highest tier TV 'XL' triple-play product or as a standalone pay TV product.

[42] BT Press Release, "*BT Sport free for Millions of Homes*", 9 May 2013, http://www.btplc.com/news/articles/showarticle.cfm?articleid=%7B3c92e33b-6f97-420c-a5e2-3cdbc4d95929%7D

[43] BT Press Release, "*BT Sport wins all live UK TV rights to Champions League and Europa League*", 12 November 2013, http://sport.bt.com/sportfootball/football/bt-sport-wins-all-live-uk-tv-rights-to-champions-league-and-europa-league-S11363847946944

[44] BT's response to 9th s26 Notice, Q1, 21 February 2014. In BT's August submission, BT noted that as of May 2014, new and existing BT SBB customers can get access to standard definition versions of BT Sport 1, BT Sport 2 and ESPN on BT TV using the multicast over copper (MOCO) capability.

Other devices

2.33 Regardless of which television platform they use to watch BT Sport, BT broadband customers can also access BT Sport content on their smartphone or tablet via the BT Sport application or via live streaming to their computer or other compatible device using the BT Sport online player.

Wholesale SFBB access

Next Generation Access networks

2.34 Retail broadband products are assembled using a chain of network inputs that allows customers to send and receive information through a broadband network and into the global internet architecture. A key component of fixed line broadband products is the 'last mile' infrastructure that connects the broadband providers' core networks to an individual customer. This is known generally as the local access network.

2.35 Before SFBB products were widely available, network operators used Current Generation Access (CGA) networks to provide broadband services. CGA networks rely on a copper-based or a coaxial cable-based local access network and they generally support a maximum download speed of 24 Mbit/s.

2.36 To support the growth of SFBB products over recent years these networks have been upgraded with new technology that is capable of higher bandwidths. These upgraded networks are known as Next Generation Access (NGA) networks.

2.37 In the UK there are currently two major wide-scale NGA networks: the network operated by BT Openreach and the cable-based network operated by Virgin Media. As of June 2013, Ofcom estimated that 73 per cent of UK premises were in postcodes that were served by an NGA network.[45]

2.38 By the end of March 2014, BT's NGA network had passed more than 19 million premises (a total of 66 per cent of UK premises).[46] BT's own initiative upgrade is commercially driven and is focused on areas where the investment case has been met.

2.39 BT is also planning to roll out its NGA network to areas not covered by its commercial roll-out. This is supported by the UK Government's investment of £530 million to support the roll-out of SFBB to more rural areas. Broadband Delivery UK (BDUK), a project run by the Department of Culture, Media and Sport, is responsible for managing the Government's funding of SFBB. All of BT's BDUK contracts are now in the build phase and Ofcom expects that, by March 2017, superfast broadband will reach at least 95 per cent of premises.[47]

[45] 2013 Ofcom Communications Market Report, page 320. This includes the NGA network operated by Kingston Communications in Hull, http://stakeholders.ofcom.org.uk/market-data-research/market-data/communications-market-reports/cmr13/uk/

[46] 2014 FAMR Statement, paragraph 12.7, referring to BT, Results for the Fourth Quarter and Year to 31 March 2014, 8 May 2014, http://www.btplc.com/News/ResultsPDF/q414-release.pdf.

[47] 2014 FAMR Statement, paragraph 12.11, referring to BT, Results for the Fourth Quarter and Year to 31 March 2014, 8 May 2014, http://www.btplc.com/News/ResultsPDF/q414-release.pdf, and paragraph 12.9.

2.40 Broadband providers need access to an NGA network in order to compete in the retail SFBB market. Virgin's network does not currently offer third party wholesale access and as a result only Virgin's own retail products are provided on its NGA network. BT uses its Openreach network to supply its retail customers. Openreach also offers wholesale access to competing retail broadband providers.

BT Openreach's NGA network

2.41 BT's local access network has traditionally been based on a network of twisted copper pair connections ('local loops') connecting a local exchange to each individual customer's premises (see Figure 2.1). Historically these loops were put in place to support voice telephony services. However, using Asymmetric Digital Subscriber Line (ADSL) technology these loops have been able to support broadband products with speeds up to 24Mbit/s.

Figure 2.1: Local Loop

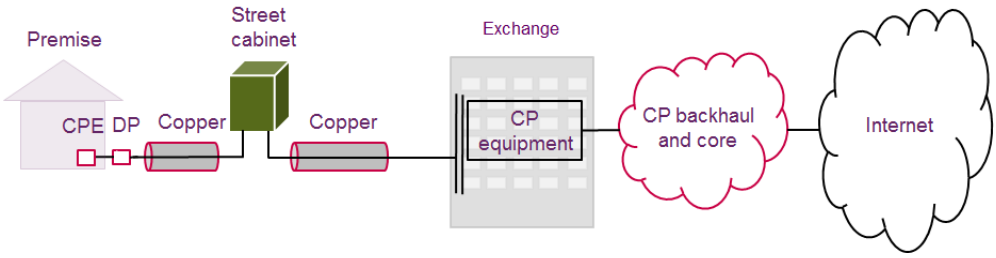

2.42 More advanced DSL technologies, such as Very High Bit Rate Digital Subscriber Line (VDSL) have been developed to support copper-based speeds potentially above 24 Mbits/s VDSL is, however, effective over only short distances which, in many cases, are shorter than the distance between a customer and the local exchange. To support superfast speeds of 30Mbit/s and faster, it was necessary for BT to upgrade its local access network to minimise the length of the copper loop.

2.43 To do this, BT has focused on incorporating FTTC in its local access network (see Figure 2.2). The cabinet is the metal box on the street where local loop wires come together to be aggregated into larger cable bundles that run to the exchange. In the FTTC configuration, fibre optic cabling is introduced to connect the exchange to the cabinet, with the connection continuing over the traditional, and now much shorter, copper loop from the cabinet to the customer's premises. This allows the connection to support VDSL-based products offering SFBB.

Figure 2.2: Virtual Unbundled Local Access

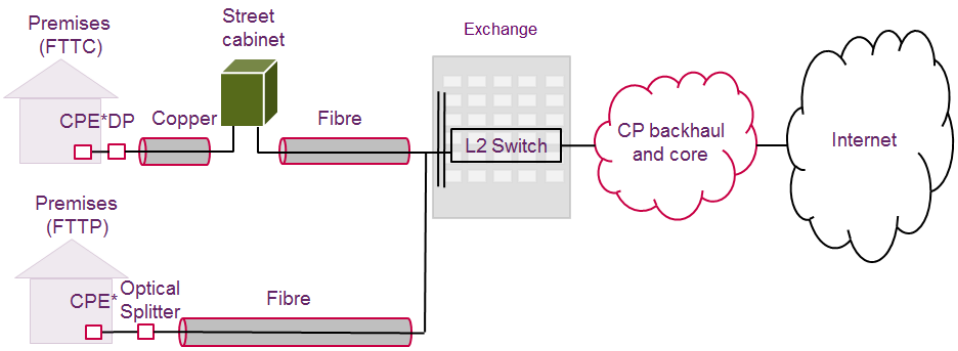

2.44 In some cases, particularly in new build developments, BT has installed a fibre connection over the entire length of the local loop. This is known as fibre to the premises (FTTP) and can currently support speeds of up to 330Mbit/s.

Regulatory background

2.45 Under the Communications Act 2003, Ofcom regulates the upstream wholesale markets, and in particular the wholesale local access market that is the focus of this investigation.

2.46 In 2005, BT gave undertakings in lieu of a market reference to the Competition Commission.[48] The undertakings required BT to set up its BT Openreach division, which operates BT's local access network.

2.47 BT Openreach supplies BT Retail, Sky and TalkTalk (among others) with the wholesale local access inputs that are needed for the supply of SFBB products to retail customers. The undertakings require BT to ensure that the Openreach products that provide access to the local access network are provided on an Equivalence of Inputs (EOI) basis. That means that BT Retail and other CPs receive the same level of service from Openreach, at equivalent prices.

2010 Wholesale Local Access (WLA) market review

2.48 In 2010 Ofcom completed a review of the Wholesale Local Access (WLA) market which included both BT's fixed access copper network and its NGA network. Ofcom determined that BT held a position of SMP in the UK (excluding the Hull Area)[49] and imposed a number of remedies on BT.[50]

2.49 In relation to the copper network, Ofcom maintained the local loop unbundling (LLU) regime that had been in force since 2004. LLU requires BT to offer physical access to the copper loop between the exchange and the customer's premises.[51]

2.50 For NGA, Ofcom imposed a remedy broadly equivalent to LLU: Virtual Unbundled Local Access (VULA).[52]

2.51 VULA provides access to BT's NGA network in a way that is similar to LLU. However, rather than providing a physical line, VULA provides a virtual connection that gives CPs a direct link to their customers and provides flexibility over how this link is integrated into their network and over product offerings. Ofcom required BT to provide VULA on fair and reasonable terms, conditions and charges, and on an equivalence of inputs basis,[53] and set out five key characteristics for the service it

[48] The original undertakings are available at: http://stakeholders.ofcom.org.uk/binaries/telecoms/policy/bt/Consolidated_Undertakings.pdf
[49] In the Hull Area Kingston Communications is the operator of the equivalent local access network.
[50] 2010 WLA Statement, section 4, http://stakeholders.ofcom.org.uk/binaries/consultations/wla/statement/WLA_statement.pdf
[51] 2010 WLA Statement, section 6.
[52] 2010 WLA Statement, paragraphs 8.162 to 8.163.
[53] 2010 WLA Statement, paragraphs 8.24 to 8.165.

expected BT to maintain.[54] However, Ofcom did not impose cost orientation or a charge control.

2014 FAMR Statement

2.52 In the 2014 FAMR Statement, published on 26 June 2014,[55] Ofcom decided to retain the obligation on BT to provide VULA, with the same five key characteristics as set out in the 2010 WLA Statement. Ofcom has also proposed to supplement its decision with guidance on its likely approach to assessing whether the VULA margin complies with that SMP condition.[56]

2.53 The 2014 FAMR Statement decided to impose an *ex ante* condition requiring BT to supply VULA on fair and reasonable terms, conditions and charges, supplemented by guidance on how we are likely to undertake our assessment when testing whether the VULA margin complies with that SMP condition.[57]

BT's wholesale superfast access products

2.54 At the time of the complaint, BT offered a range of VULA wholesale access products to its competitors. Marketed as Generic Ethernet Access (GEA) products, these inputs are used by BT, and other CPs such as TalkTalk and Sky, to provide SFBB products across the Openreach NGA network.

2.55 GEA products are offered both for FTTC-enabled and FTTP-enabled connections in a range of specifications from a 40Mbit/s product to a 330Mbit/s product. Table 2.4 sets out the Openreach GEA products that are used by BT to provide the range of BT Infinity products.

[54] Local, service agnostic, uncontended, access, allowing a high degree of access control to the interconnecting CP, and allowing interconnecting CPs to control customer premises equipment, 2010 WLA Statement, paragraphs 8.10 to 8.20.
[55] 2014 FAMR Statement, paragraphs 12.21 to 12.112,http://stakeholders.ofcom.org.uk/binaries/telecoms/ga/fixed-access-market-reviews-2014/statement-june-2014/volume1.pdf
[56] Fixed Access Market Reviews: Approach to the VULA margin, http://stakeholders.ofcom.org.uk/binaries/consultations/VULA-margin/summary/VULA_Margin_Consultation.pdf.
[57] 2014 FAMR Statement, paragraphs 12.98, 12.114 and 12.134.

Table 2.4: Openreach GEA products consumed by BT to provide BT Infinity products (prices as at January 2014)

Wholesale product (download speed / upload speed)	Retail product[58]	Charge per month[59] (ex VAT)
GEA 40/2	BT Infinity 1 (acquisition from 4 January 2014)	£6.90
GEA 40/10	BT Infinity 1 (acquisition up to 4 January 2014) and Unlimited Infinity 1	£7.40
GEA 80/20	BT Infinity 2	£9.95
GEA 220/20	BT Infinity 3 (FTTP only)	£15.61
GEA 330/20	BT Infinity 4 (FTTP only)	£24.61

Source: BT Openreach price list[60]

The complaint and other key submissions

2.56 We set out below a high level summary of some of the key points raised in submissions to us from BT and TalkTalk.

TalkTalk complaint

2.57 On 13 March 2013[61] TalkTalk submitted a complaint to Ofcom alleging that BT was abusing a dominant position in breach of Chapter II of the Act and Article 102 of the TFEU (TalkTalk complaint). In particular, TalkTalk alleged that BT's pricing of SFBB products resulted in a margin squeeze and that this was having, and was intended to have, an exclusionary effect on BT's competitors.[62]

2.58 TalkTalk set out its view of the test for a margin squeeze based on the case law and the European Commission and Office of Fair Trading (OFT) Guidance, and provided evidence which it considered met the criteria set out in the test.[63]

2.59 TalkTalk explained that BT is a vertically integrated undertaking supplying both wholesale local access products as well as competing in the retail market with its BT Infinity SFBB products.[64]

2.60 As a SFBB retailer, TalkTalk said that it requires wholesale local access products from BT in order to compete with its retail products. TalkTalk stated that BT's supply

[58] BT's response to 9th s26 notice, Q1, 21 February 2014.
[59] Prices correct as of January 2014 and refer to the "transition products" price list relevant for GEA products purchased alongside a WLR or MPF product. GEA products without a WLR or MPF are offered at higher prices.
[60] Available at: http://www.openreach.co.uk/orpg/home/products/pricing/loadProductPriceDetails.do?data=M80QNeH46o4g6JKGD604vTypQOKfNn%2Beo6vmoVhAOBZZ6rNZujnCs99NbIKJZPD9hXYmiijxH6wr%0ACQm97GZMyQ%3D%3D
[61] On 20 March 2013, TalkTalk submitted a revised complaint to reflect some updated modelling. However the conclusions of its 13 March complaint were unaltered.
[62] TalkTalk complaint (confidential), 13 March 2013, pages 2, 112 to 115, paragraphs 456 to 472.
[63] TalkTalk complaint (confidential), 13 March 2013, pages 37 to 39, paragraph 132.
[64] TalkTalk complaint (confidential), 13 March 2013, page 38, paragraph 132(a).

of wholesale local access was indispensable to the retail provision of SFBB products.[65]

2.61 TalkTalk considered that BT is the only supplier of local access to third party retailers wishing to provide broadband services and, as a result, that BT is dominant in the supply of the relevant wholesale local access products.[66]

2.62 TalkTalk focused on BT's pricing in February 2013 in relation to which it alleged that BT had failed to maintain a sufficient margin between its pricing of wholesale local access products and its pricing of retail SFBB products, such that BT would be unable to cover its own downstream costs.[67]

2.63 TalkTalk provided a "*top-down*" analysis of the relative margins on BT's SBB and SFBB products. In this analysis, TalkTalk claimed that the additional revenue from BT's SFBB products over its SBB products was less than the additional cost of supplying its SFBB products over its SBB products.[68]

2.64 TalkTalk also provided a "*bottom up*" analysis of BT's margins on the basis of an EEO test and the long run average incremental cost (LRAIC) of providing SFBB. TalkTalk's analysis was based on BT's known costs and revenues as well as TalkTalk's own downstream costs, which TalkTalk considered to be a reliable and conservative proxy of BT's downstream costs (noting that TalkTalk does not have visibility of all of BT's downstream costs).[69]

2.65 TalkTalk assessed the margins on both BT's core dual-play bundle[70] (Infinity 1) and its triple-play bundle (TV Essential and Unlimited Infinity 1).[71] In the latter case, TalkTalk analysed the incremental costs and revenues which it understood to be attributable to the TV Essential component of one of BT's triple-play bundles. TalkTalk considered that to achieve a positive net present value (NPV) on Infinity 1, BT would need to increase its prices by £[✂]**[£4-£20]** per customer month.[72] TalkTalk considered that to achieve a positive NPV on TV Essential and Unlimited Infinity 1, BT would need to increase its price by £[✂]**[£>£7]** per customer month.[73]

2.66 TalkTalk claimed that the alleged margin squeeze was resulting in serious adverse effects on competition and consumers. TalkTalk alleged that the margin squeeze makes it uneconomic for it to invest in customer acquisition or to add additional features to its superfast product offerings. As a result, TalkTalk claimed that BT's principal broadband rivals have achieved only a combined market share of 9 per cent of customers using BT's local access network.[74]

---

[65] TalkTalk complaint (confidential), 13 March 2013, page 38, paragraph 132(b).
[66] TalkTalk complaint (confidential), 13 March 2013, pages 26 and 38, paragraphs 82 and 132(c).
[67] TalkTalk complaint (confidential), 13 March 2013, page 38 and 39, paragraph 132(d).
[68] TalkTalk complaint (confidential), 13 March 2013, section 7.2, pages 83 to 87, paragraphs 328 to 346.
[69] TalkTalk complaint (confidential), 13 March 2013, section 7.3.1, pages 87 to 89, paragraphs 347 to 354.
[70] TalkTalk complaint (confidential), 13 March 2013, section 7.3, pages 87 to 99, paragraphs 347 to 392.
[71] TalkTalk complaint (confidential), 13 March 2013, section 7.4, pages 100 to 107, paragraphs 393 to 427.
[72] TalkTalk complaint (confidential), 13 March 2013, section 7.3.4, page 99, paragraph 390.
[73] TalkTalk complaint (confidential), 13 March 2013, section 7.4.2, page 106, paragraph 426.
[74] TalkTalk complaint (confidential), 13 March 2013, pages 10 to 11, paragraphs 21 to 23.

2.67 TalkTalk further considered that the SFBB market is at a critical stage in which a substantial proportion of residential and commercial customers are expected to switch from SBB to SFBB products.[75] TalkTalk claimed [✂].[76]

2.68 TalkTalk requested that Ofcom open an investigation[77] and, if an infringement were found, that it, amongst other things, impose a substantial financial penalty on BT[78] and direct BT to raise its margins.[79] TalkTalk considered that BT's wholesale local access products are priced too highly and that any margin squeeze could be alleviated by a reduction in the price of GEA.[80]

BT's response to the TalkTalk complaint

2.69 We provided a non-confidential version of the TalkTalk complaint to BT on 22 March 2013 and invited BT to comment. BT responded to the complaint on 2 April 2013 (the BT response)[81] and set out its view that the TalkTalk complaint was unfounded, on the basis that TalkTalk had not correctly considered the downstream market and that its financial analysis was flawed.

2.70 BT considered that TalkTalk had failed to identify a focal product which would be the subject of the investigation and that as a result, it had not identified a relevant downstream market.[82] BT did not accept that there is a separate downstream SFBB market and considered that the superfast services are part of a wider broadband access market containing both SBB and SFBB products.[83]

2.71 BT considered that, if the market was defined in this way, the TalkTalk complaint would be "*without foundation because it would be unable to show harm (as well as being unable to show a squeeze)*."[84] BT also considered that a margin squeeze assessment should be undertaken at the level at which exclusion could occur. In this context, BT argued that TalkTalk's assessment of two specific BT offerings was inappropriate and that instead the assessment should "*test the overall profitability of BT's entire portfolio of broadband propositions and speeds.*"[85]

2.72 BT considered that TalkTalk's margin squeeze assessment was fundamentally flawed on the basis that:

- TalkTalk did not truly believe that there was a margin squeeze as it had publicly stated that it could trade profitably at current prices;[86]
- TalkTalk's 'top-down' analysis was neither an appropriate way to measure margin squeeze, nor was it, in this case, supported by the facts;[87] and

[75] TalkTalk complaint (confidential), page 10, paragraph 21.
[76] TalkTalk complaint (confidential), 13 March 2013, page 11, paragraph 23.
[77] TalkTalk complaint (confidential), 13 March 2013, page 11, paragraph 27.
[78] TalkTalk complaint (confidential), 13 March 2013, page 12, paragraph 28.
[79] TalkTalk complaint (confidential), 13 March 2013, page 123, paragraph 503.
[80] TalkTalk complaint (confidential), 13 March 2013, page 12, paragraph 28.
[81] BT provided brief additional comments on 9 April 2013, following revisions TalkTalk made to the confidentiality redactions in its complaint.
[82] BT response (confidential), 2 April 2013, page 12, paragraph 34.
[83] BT response (confidential), 2 April 2013, pages 12 to 13, paragraphs 36 to 41.
[84] BT response (confidential), 2 April 2013, page 24, paragraph 88.
[85] BT response (confidential), 2 April 2013, page 14, paragraph 44.
[86] BT response (confidential), 2 April 2013, pages 15 to 16, paragraph 49 to 50.

- TalkTalk's 'bottom-up' assessment was based on incorrect assumptions and BT could demonstrate that its SFBB pricing provides a sufficient margin.[88]

2.73 BT also considered that TalkTalk had made no credible allegation of exclusionary effects.[89]

TalkTalk's further submissions on BT Sport

2.74 On 21 May 2013, TalkTalk made a supplementary submission (the TalkTalk supplementary submission) setting out its view that changes to BT's retail SFBB products since the complaint had intensified the margin squeeze.[90] The changes related to a price reduction of one of BT's core Infinity products and from August 2013, the addition of 'free' premium television sports content, in the form of BT Sport, to all its broadband products. In particular, TalkTalk asserted that BT had a strategy of giving free access to BT Sport on a BT set-top box to SFBB customers only, and that this strategy, combined with BT's public announcements about the offer, indicated that BT planned to use BT Sport to drive SFBB take-up. As such, it submitted that the pricing of BT Sport was relevant to Ofcom's investigation.[91] In TalkTalk's view, the offer of free BT Sport was a "*clear additional demonstration of BT's deliberate intention to exclude rivals from the market for SFBB, a market where competition has already been severely weakened by BT's conduct to date*."[92]

2.75 TalkTalk carried out its own analysis of the cost of an equally efficient operator replicating BT's offer.[93] After deducting the revenues which it estimated BT would receive from advertising, sales to 'pubs and clubs' and sales to Sky subscribers, TalkTalk estimated the costs which would need to be recovered from BT customers for BT Sport. It then allocated the costs across BT's entire broadband base, with a higher allocation to those customers which it considered would derive greater benefit from the product such as those watching BT Sport on TV rather than online via the app.[94]

2.76 In assessing the margin available on the BT Infinity dual play product, TalkTalk concluded that in view of the scale of losses from offering BT Infinity 1 at the May 2013 offer price levels, there would be no payback period over which BT could be profitable.[95] TalkTalk considered that BT would need to increase the price of Infinity 1 by £[✂]**[£7-£17]** plus VAT per month, or reduce its wholesale costs by two-thirds, in

[87] BT response (confidential), 2 April 2013, page 16, paragraph 51.
[88] BT response (confidential), 2 April 2013, page 18, paragraph 61 et seq.
[89] BT response (confidential), 2 April 2013, pages 24 to 26, section 5.
[90] TalkTalk supplementary submission (confidential), 21 May 2013, page 3, paragraph 8.
[91] TalkTalk supplementary submission (confidential), 21 May 2013, page 8 to 9, paragraphs 33 to 35 (referencing BT Press Release, "*BT Sport free for Millions of Homes*", 9 May 2013; "BT boss: 'We want to bring sports back to fans'", The Telegraph, 11 May 2013, http://www.telegraph.co.uk/finance/newsbysector/mediatechnologyandtelecoms/10051240/BT-Sport-BT-boss-wants-to-bring-sports-back-to-fans.html).
[92] TalkTalk supplementary submission (confidential), 21 May 2013, page 8, paragraph 32.
[93] TalkTalk supplementary submission (confidential), 21 May 2013, page 9, paragraph 39. TalkTalk noted that one complication in this approach was that BT had acquired sport rights which were essentially non-replicable and had chosen to charge a zero incremental retail price for them. TalkTalk's approach therefore sought to determine what price per customer would be needed for BT Sport to break even in the last year of the current deal with the FAPL, and then attributed this as a cost per customer. TalkTalk stated that this approach was highly favourable to BT.
[94] TalkTalk supplementary submission (confidential), 21 May 2013, pages 14 to 18, paragraphs 64 to 76.
[95] TalkTalk supplementary submission (confidential), 21 May 2013, page 24, paragraph 114.

order to achieve a positive NPV over a three year customer lifetime.[96] TalkTalk said that the effect of the alleged margin squeeze intensification was an immediate fall in TalkTalk's share price around the time of BT's announcement.[97]

2.77 On 10 September 2013, TalkTalk wrote to Ofcom setting out further views on the appropriate treatment of BT Sport costs in the investigation (TalkTalk September submission). As in its supplementary submission, TalkTalk argued that BT's stated position and its actions demonstrated that BT Sport was primarily intended to increase BT's broadband share, particularly for SFBB, rather than developing a standalone sports broadcast business.[98] TalkTalk considered that the net costs of BT Sport should be recovered from BT's broadband products.[99]

BT's further submissions on BT Sport

2.78 BT provided comments on the TalkTalk supplementary submission in a letter of 10 June 2013 (the BT supplementary response).

2.79 BT stated that it would not be appropriate for Ofcom to include BT Sport in the context of the current investigation.[100] In this regard, BT asserted that its downstream product offer was "*substantially differentiated from that of TTG* [TalkTalk] *(and other retail competitors).*"[101] BT argued that assessing premium sport content in BT's broadband bundles as part of the investigation would be inconsistent with the "*standard margin squeeze paradigm which focused on broadly homogenous downstream products*"[102] and would "*introduce highly novel and untested concepts into the proper framework of analysis of an alleged margin squeeze.*"[103]

2.80 BT rejected the view that its commercialisation of sport was in any way exclusionary. BT noted that it was not dominant in the relevant upstream market but that it did face a dominant competitor, namely Sky. BT's position was that there was no anti-competitive effect flowing from its inclusion of BT Sport in broadband packages and that this was, in fact, a manifestly pro-competitive move.[104]

2.81 On 22 November 2013, BT made a further submission to Ofcom in relation to the treatment of BT Sport for the purposes of our investigation (BT's November submission).[105] In its view, TalkTalk's analysis represented a "*crude over-simplification of the investments BT has made in sports content in order to generate value over the longer term*"[106] because its approach to treating the cost of BT Sport as a cost of providing SFBB took a short-run and static view, which would fail to take account of BT's longer-term objectives.[107] BT explained why it had bid for the FAPL

[96] TalkTalk supplementary submission (confidential), 21 May 2013, page 24, paragraph 113.
[97] TalkTalk supplementary submission (confidential), page 25, paragraphs 122 to 126.
[98] TalkTalk September submission (confidential), 10 September 2013, page 1.
[99] TalkTalk September submission (confidential), 10 September 2013, page 5.
[100] BT supplementary response, 10 June 2013, page 1.
[101] BT supplementary response, 10 June 2013, page 1.
[102] BT supplementary response, 10 June 2013, page 1.
[103] BT supplementary response, 10 June 2013, page 3.
[104] BT supplementary response, 10 June 2013, page 2.
[105] In addition to the issue of BT Sport, BT's submission considered the issues raised more generally in the complaint (before the announcement of the launch of BT Sport) and the analytical framework for considering whether pricing behaviour may constitute an abusive margin squeeze.
[106] BT's November submission (confidential), 22 November 2013, page 27, paragraph 5.7.
[107] BT's November submission (confidential), 22 November 2013, page 40, paragraphs 7.6 to 7.7.

rights, its strategy in bidding for the rights, and its reaction to the outcome of the auction.[108]

2.82 BT set out an outline margin squeeze test including BT Sport, which it referred to as a 'screening test'.[109] It considered the profitability of BT Sport over a three year period, first taking the total cost of BT Sport (from BT's business case) and subtracting revenues from paying customers to result in the cost which would need to be recovered from broadband.[110] BT considered that [✂].[111] It based its revenue calculations on the BT Sport launch business case – i.e. on forecast revenues at the point of launch. BT divided the resulting costs over BT's total broadband customer base at the end of 2012/13 to arrive at a monthly cost per BT Sport subscriber.[112] BT then compared this cost with the 'slack' or 'headroom' in the SFBB margin before BT Sport.[113]

2.83 BT's November submission concluded that, even including the costs of BT Sport, there was no margin squeeze.[114] In any case, according to BT, anticompetitive foreclosure on the downstream market for the supply of retail broadband products would be unlikely.[115]

Further comments from the parties in response to Ofcom's provisional decision

2.84 Ofcom provided a provisional no grounds for action decision to BT in June 2014, and to TalkTalk and other interested parties (see paragraph 2.93 below) in July 2014. BT and TalkTalk both provided substantive comments on the provisional no grounds for action decision.[116] We have not summarised these comments in this section 2, but refer to them where appropriate in the remainder of this decision.

Ofcom's investigation

Decision to open an investigation under section 25 of the Act

2.85 At the time we opened the investigation, Ofcom had concurrent powers with the OFT to apply the Act in relation to activities connected with communications matters.[117] Ofcom is a designated National Competition Authority (NCA), for the purpose of applying European competition law (Articles 101 and 102 TFEU), where there may be an effect on trade between Member States.[118]

[108] BT's November submission (confidential), 22 November 2013, page 28 to page 38, section 6.
[109] BT's November submission (confidential), 22 November 2013, page 39, paragraph 7.1.
[110] BT's November submission (confidential), 22 November 2013, pages 6 and 43, paragraphs 1.20 to 1.24 and 7.18 to 7.20.
[111] BT's November submission (confidential), 22 November 2013, page 45, paragraph 7.24.
[112] BT's November submission (confidential), 22 November 2013, page 44, paragraph 7.21.
[113] BT's November submission (confidential), 22 November 2013, page 44, paragraph 7.21.
[114] BT's November submission (confidential), 22 November 2013, page 47, paragraph 7.32.
[115] BT's November submission (confidential), 22 November 2013, pages 48 to 53, paragraphs 8.2 to 8.18.
[116] BT's August submission (confidential), 6 August 2014; TalkTalk's August submission (confidential), 29 August 2014.
[117] Following the creation of the Competition and Markets Authority (CMA) on 1 April 2014, Ofcom's powers under the Act are now concurrent with those of the CMA.
[118] Competition Act and Other Enactments (Amendment) Regulations 2004 (SI 2004/1261).

2.86 On 24 April 2013, we wrote to the OFT seeking agreement that Ofcom, in light of its knowledge of these markets and its previous experience conducting similar investigations, was the best placed competent person to investigate the case and that it had jurisdiction under the Act.

2.87 On 29 April 2013, the OFT confirmed its agreement that Ofcom should exercise prescribed functions in relation to the case pursuant to regulation 4(2) of the Competition Act 1998 (Concurrency) Regulations 2004.

2.88 Having considered carefully the TalkTalk complaint and BT response, Ofcom decided, in accordance with section 25 of the Act, that it had reasonable grounds for suspecting that BT's conduct had infringed the Chapter II prohibition in the Act and Article 102 TFEU, and that opening an investigation would be consistent with Ofcom's administrative priorities. Ofcom opened this investigation on 1 May 2013 and notified BT and TalkTalk that day.[119]

Relevance of BT Sport to the investigation

2.89 Having considered the TalkTalk supplementary submission, and the BT supplementary response, Ofcom was of the view that the issues raised in relation to BT Sport should properly be considered as part of this investigation and that therefore both the February 2013 offer and the May 2013 offer were relevant to the investigation.

2.90 Ofcom notified BT and TalkTalk of this view on 18 June 2013.

Ofcom's evidence gathering

2.91 During the investigation we gathered evidence from BT and TalkTalk using formal information requests under section 26 of the Act (section 26 Notices).

2.92 We have served 11 section 26 notices in total:

- 1st section 26 Notice issued to BT on 10 May 2013;
- 2nd section 26 Notice issued to BT on 3 June 2013;
- 3rd section 26 Notice issued to BT on 21 June 2013;
- 4th section 26 Notice issued to BT on 5 July 2013;
- 1st section 26 Notice issued to TalkTalk on 24 July 2013;
- 5th section 26 Notice issued to BT on 20 August 2013;
- 6th section 26 Notice issued to BT on 1 October 2013;
- 7th section 26 Notice issued to BT on 27 November 2013;
- 8th section 26 Notice issued to BT on 6 January 2014;

[119] http://stakeholders.ofcom.org.uk/enforcement/competition-bulletins/open-cases/all-open-cases/cw_01103/

- 9th section 26 Notice issued to BT on 14 February 2014;
- 10th section 26 Notice issued to BT on 17 April 2014;
- 11th section 26 Notice issued to BT on 30 September 2014; and
- 12th section 26 Notice issued to BT on 15 October 2014.

Third parties

2.93 We have afforded ‘interested party’ status to two third parties. In May 2013 we accepted Vodafone’s request to be an interested party and in September 2013 we accepted Sky’s request.

Section 3

Legal framework for the investigation

The Chapter II prohibition and Article 102 TFEU

3.1 Ofcom has investigated whether BT has abused a dominant position by engaging in a margin squeeze as between its wholesale VULA products and its retail SFBB products since the launch of these products in 2010, contrary to the Chapter II prohibition and/or Article 102 TFEU.

3.2 The Chapter II prohibition, set out in section 18 of the Act, states that:

> *"any conduct on the part of one or more undertakings which amounts to the abuse of a dominant position in a market is prohibited if it may affect trade within the United Kingdom."*[120]

3.3 Article 102 TFEU states:

> *"Any abuse by one or more undertakings of a dominant position within the internal market or in a substantial part of it shall be prohibited as incompatible with the internal market in so far as it may affect trade between Member States."*

3.4 To find an infringement of the Chapter II prohibition, it is necessary to establish that:

- at the time of the alleged infringement, BT[121] held a dominant position on a relevant market(s) within the UK or any part of it;
- BT abused that dominant position on that market or a related market; and
- such abuse may have affected trade within the UK or any part of it.

3.5 Separately, if raised by the party under investigation, Ofcom may consider whether there is an objective justification for the exclusionary conduct and/or efficiencies which would outweigh the negative effects of the exclusionary conduct.[122]

---

[120] The Chapter II prohibition does not apply in cases in which it is excluded pursuant to section 19 of the Act. None of the excluded cases are applicable in respect of the conduct which is the subject of this decision.

[121] The Chapter II and Article 102 prohibitions apply only to 'undertakings'. The concept of an undertaking has been held to encompass "*every entity engaged in an economic activity*" Case C-41/90 *Hofner and Elser v Macrotron GmbH* [1991], paragraph 21, in relation to which "*any activity consisting in offering goods or services on a given market is an economic activity*" Case C-180/98 *Pavlov* [2000], paragraph 75. Ofcom considers that, given its commercial operations, BT is clearly an undertaking for the purposes of Chapter II and Article 102 TFEU.

[122] Communication from the Commission: Guidance on the Commission's enforcement priorities in applying Article 82 of the EC Treaty to abusive exclusionary conduct by dominant undertakings, OJ C45/7, 24.2.2009. Paragraph 28 also provides for an assessment as to whether there is an objective justification for the exclusionary conduct, further to claims put forward by a dominant undertaking that its conduct is justified. In this respect, it is incumbent upon the dominant undertaking to provide all the

3.6 Regulation 1/2003[123] requires Ofcom to apply Article 102 TFEU alongside national competition law to any abuse prohibited by Article 102. Practically, this means that where Ofcom investigates a potential breach of Chapter II and considers that there is a potential effect on trade between Member States it will also apply Article 102.

3.7 Article 102 is only engaged if the undertaking holds a dominant position in the whole or a substantial part of the common market. Member States will usually be 'substantial' parts of the common market.[124] It is not necessary to show that there has been an actual effect on trade as a result of the alleged conduct but that the conduct had the potential to affect trade between Member States. In many cases involving a single Member State the nature of the alleged infringement and its propensity to foreclose the national market provides a good indication of the capacity of the agreement or practice to affect trade between Member States.[125]

3.8 For the purposes of this decision references to the Chapter II prohibition and/or section 18 of the Act should be deemed to include an appropriate reference to Article 102 TFEU unless specifically excluded.

The relevant market and the question of dominance

3.9 The Court of Justice of the European Union (CJEU)[126] has defined a dominant position as:

> *"…a position of economic strength enjoyed by an undertaking which enables it to prevent effective competition being maintained on the relevant market by giving it the power to behave to an appreciable extent independently of its competitors, customers and ultimately of consumers."*[127]

3.10 For the purposes of the Chapter II prohibition and/or Article 102 TFEU, dominance is assessed within a relevant market.[128] Section 4 considers the relevant markets in this case, before considering the extent to which BT may be dominant in one or other of those markets.

---

evidence necessary to demonstrate that the conduct concerned is objectively justified. It then falls to Ofcom to make the ultimate assessment of whether the conduct concerned is not objectively necessary and, based on a weighing-up of any apparent anti-competitive effects against any advanced and substantiated efficiencies, is likely to result in consumer harm.

[123] Council Regulation (EC) No 1/2003 on the implementation of the rules of competition laid down in Articles 81 and 82 of the Treaty, OJ L1, 04.01.2003, pages 1 to 25.

[124] See for example: *Lipton Cash Registers/Hugin* [1972] OJ L22/23; Case IV/29.877 *British Telecommunications* [1982] OJ L360/36, paragraph 26; Case C-7/82 *GVL v Commission* [1983], paragraph 44; Case C-322/81 *Michelin v Commission* [1983].

[125] Commission Notice: Guidelines on the effect on trade concept contained in Articles 81 and 82 of the Treaty, OJ C101, 27.4.2004, paragraph 77.

[126] Formerly the European Court of Justice.

[127] See Case C-27/76 *United Brands v Commission* [1978], paragraph 65.

[128] OFT 2004 competition law guideline, Market Definition https://www.gov.uk/government/uploads/system/uploads/attachment_data/file/284423/oft403.pdf and Commission notice on the definition of the relevant market for the purposes of Community competition law [1997], OJ C372/5.

Nature of the alleged abuse

3.11 Ofcom's investigation and TalkTalk's allegations concern margin squeeze. In the *Deutsche Telekom* case, the CJEU held that:

> *"margin squeeze is capable, in itself, of constituting an abuse within the meaning of [Article 102] in view of the exclusionary effect that it can create for competitors who are at least as efficient as the appellant."*[129]

3.12 Margin squeeze has been recognised as an independent category of abuse by the European Commission,[130] the General Court,[131] the CJEU,[132] the OFT,[133] the Competition Appeal Tribunal[134] and the Court of Appeal.[135] The European Commission and the OFT have also issued guidance on assessing margin squeeze cases.[136] Broadly, we consider that the test for margin squeeze as formulated in the case law can be summarised as the following six conditions, all of which we would expect to be satisfied in order to find a margin squeeze abuse:[137]

i) First, the undertaking is vertically integrated, i.e. it operates in related upstream and downstream markets, its upstream operations providing an input both to its competitors and to its own operations in the downstream market;

ii) Second, an input supplied by the undertaking in the upstream market is used to participate in the downstream market. It is not necessary for the upstream input to be indispensable for supply to the downstream market – only that it be used to supply there;[138]

iii) Third, the undertaking enjoys a dominant position in the upstream market;[139]

---

[129] Case C-280/08 *Deutsche Telekom AG v Commission* [2010], paragraph 183.
[130] Case 109/75R *National Carbonising Company* [1976] OJ L35/6; Case IV/30.778 *Napier Brown - British Sugar* [1988] OJ L284/41; Case COMP/C-1/37.451, 37.578, 37.579 *Deutsche Telekom AG* [2003]; Case COMP/38.784 *Wanadoo España v Telefónica* [2007].
[131] Formerly known as the Court of First Instance: Case T-5/97 *Industrie des Poudres Sphériques v Commission* [2000]; Case T-271/03 *Deutsche Telekom AG v Commission* [2008]; Case T-336/07 *Telefónica v Commission* [2012]; and Case T-398/07 *Spain v Commission* [2012].
[132] Case C-280/08 *Deutsche Telekom AG v Commission* [2010]; Case C-52/09 *Konkurrensverket v TeliaSonera Sverige AB* [2011]; Case C-295/12 *Telefónica v Commission* [2014].
[133] See for example, CA98/20/2002 *BSkyB investigation: alleged infringement of the Chapter II Prohibition* (2002); CA98/3/03 *Genzyme* OFT (2003).
[134] Case No 1016/1/1/03 *Genzyme Ltd v OFT* [2004] CAT 4; Case Nos 1046/2/4/04 & 1034/2/4/04 (IR) *Albion Water v Water Services Regulation Authority* [2006] CAT 36.
[135] *Welsh Water v Albion Water* [2008] EWCA Civ 536.
[136] Communication from the Commission: Guidance on the Commission's enforcement priorities in applying Article 82 of the EC Treaty to abusive exclusionary conduct by dominant undertakings OJ C45/7, 24.2.2009; OFT 417 Competition Act 1998 The application in the telecommunications sector, February 2000; OFT 414a Assessment of Conduct Draft Guidance, April 2004.
[137] As set out at paragraph 3.5 above, if raised by the party under investigation, Ofcom must also consider whether there is an objective justification for the exclusionary conduct and/or efficiencies.
[138] *Welsh Water v Albion Water* [2008] EWCA Civ 536, paragraph 88; Case C-52/09 *Konkurrensverket v TeliaSonera Sverige AB* [2011], paragraph 72; Case T-336/07 *Telefónica v Commission* [2012]; and Case T-398/07 *Spain v Commission* [2012], paragraph 76.
[139] Case IV/30.778 *Napier Brown - British Sugar* OJ [1988] L284/41, paragraphs 50-60; Case 109/75R *National Carbonising Company* OJ [1976] L35/6, paragraph 226; in Case COMP/C-1/37.451, 37.578,

iv) Fourth, the undertaking is active in the downstream market;

v) Fifth, the undertaking fails to maintain a sufficient margin between its upstream and downstream prices such that it fails to cover downstream costs; and

vi) Sixth, there is (at least) the potential for anti-competitive effects in the downstream market as a consequence of the failure to maintain a sufficient margin.[140]

3.13 Broadly, conditions one to four are considered in Section 4 of this decision, condition five is considered in Sections 5, 6 and 7, and condition 6 is considered in Section 7.

Quality and weight of the evidence

3.14 Ofcom has taken into account throughout the investigation whether the quality of evidence before it is sufficient to meet the standard required to support an infringement finding, to the civil standard of proof, that on the balance of probabilities the undertaking breached competition law.[141]

3.15 In *JJB Sports* the CAT held that:

> *"In these circumstances, in applying the balance of probabilities in a case involving penalties, the Tribunal must be satisfied that the quality and weight of the evidence is sufficiently strong to overcome the presumption that the party in question has not engaged in unlawful conduct. For example, if in a borderline case the decision is finely balanced and the Tribunal finds itself to-ing and fro-ing, the correct analysis is that the evidence is not sufficiently strong to satisfy the Tribunal on the balance of probabilities that the infringement occurred."*[142]

Remedies

3.16 If Ofcom establishes an infringement, it has a number of powers to remedy the infringement, including a power under section 36 of the Act to impose a financial penalty on BT not exceeding 10 per cent of its worldwide turnover.

37.579 *Deutsche Telekom AG* [2003], Deutsche Telekom was found to be dominant in the market for access to local fixed networks at the wholesale level (see paragraphs 96 -101 (decision upheld by the CJEU in Case C-280/08 *Deutsche Telekom AG v Commission* [2010]));. in CA98/3/03 *Genzyme* OFT decision (2003), the abusive undertaking was found by the OFT to be dominant upstream and this was upheld by the Competition Appeal Tribunal on appeal in Case No 1016/1/1/03 *Genzyme Ltd v OFT* [2004] CAT 4 (at paragraphs 285-286).

[140] Case C-280/08 *Deutsche Telekom AG v Commission* [2010], paragraphs 252 to 255; Case C-52/09 *Konkurrensverket v TeliaSonera Sverige AB* [2011], paragraphs 60 to 66; Case T-398/07 *Spain v Commission* [2012], paragraphs 89 to 93.

[141] See Case 1001/1/1/01 *Napp Pharmaceutical Holdings Limited and Subsidiaries v Director General of Fair Trading* [2002] CAT 1, at paragraph 109; Case 1124/1/1/09 *North Midland Construction PLC v OFT* [2011] CAT 14, at paragraph 16; and *Re B* [2008] UKHL 35 per Lord Hoffmann, at paragraph 13.

[142] Case Nos 1021/1/1/03 & 1022/1/1/03 *JBB Sports PLC v Office of Fair Trading* [2004] CAT 17, paragraph 200.

Section 4

BT's position on the relevant markets

Introduction

4.1 In assessing whether or not there has been an abuse of a dominant position, in the form of a margin squeeze, it is necessary to assess the six conditions set out at paragraph 3.12.

4.2 We consider that BT is clearly a vertically integrated operator, its upstream operations (i.e. BT Openreach) providing an input (i.e. VULA) both to its competitors and to its own operations (i.e. BT Retail) in the downstream market. We therefore consider that conditions one and two set out at paragraph 3.12 are clearly satisfied.

4.3 In this section, we consider conditions three and four set out at paragraph 3.12. Condition three is that an undertaking is dominant in the upstream market from which it supplies the input used to participate in the related downstream market. Condition four is that the undertaking is active in that downstream market (but it is not required to be dominant in that market).

Relevant upstream market definition and dominance

VULA/Wholesale Local Access

4.4 Our investigation concerns the margin between BT's wholesale VULA product and its SFBB retail products. The VULA product provides wholesale local access to BT's NGA network which is used to deliver SFBB.

4.5 In the 2010 WLA Statement Ofcom reviewed the wholesale local access market on an *ex ante* basis.[143] Ofcom has recently reviewed these markets again as part of the Fixed Access Market Review and on 26 June2014, published a statement on these markets (2014 FAMR Statement).[144]

4.6 In both the 2010 WLA Statement and the 2014 FAMR Statement, Ofcom followed the same market definition principles as it would for a Chapter II/Article 102 investigation, as it is required to do by Article 15(3) of the Framework Directive.[145] Therefore, we take them as the starting point for our analysis of market definition and dominance in this decision.

Ofcom's position in the 2010 WLA Statement and the 2014 FAMR Statement

4.7 In the 2010 WLA Statement, Ofcom found that there was a market for WLA. WLA is the fixed connection from the local exchange or access node to the end user and is an input into a variety of retail services that rely on a fixed local access connection:

[143] 2010 WLA Statement, http://stakeholders.ofcom.org.uk/binaries/consultations/wla/statement/WLA_statement.pdf
[144] 2014 FAMR Statement, http://stakeholders.ofcom.org.uk/binaries/telecoms/ga/fixed-access-market-reviews-2014/statement-june-2014/volume1.pdf
[145] Directive on a common regulatory framework for electronic communications networks and services (2002/21/EC).

- the provision of narrowband telephony (both voice services and dial-up internet access);
- the provision of asymmetric broadband (at both standard and superfast speeds);
- the provision of ISDN2 and ISDN30; and
- the provision of some symmetric broadband (leased line) services.[146]

4.8 Ofcom defined the scope of the relevant WLA market as including loop-based, cable-based and fibre-based local access at a fixed location. It excluded mobile-based, access-based, fixed wireless-based and satellite-based WLA.[147]

4.9 Ofcom concluded that there are two distinct geographic markets. These are:

- the supply of copper loop-based, cable-based and fibre-based wholesale local access at a fixed location in the UK excluding the Hull Area; and
- the supply of copper loop-based, cable-based and fibre-based wholesale local access at a fixed location in the Hull Area.[148]

4.10 Ofcom reached the same conclusions in the 2014 FAMR Statement.[149]

4.11 In the 2010 WLA Statement Ofcom, found that BT had SMP in the WLA market in the UK excluding the Hull Area.[150]

4.12 Similarly, in the 2014 FAMR Statement, Ofcom has decided that BT has SMP in the WLA market in the UK excluding the Hull Area.[151]

TalkTalk's and BT's submissions on wholesale market definition

4.13 In the TalkTalk complaint, TalkTalk defined the focal point for the analysis as the *"provision of wholesale inputs that allow for the delivery of SFBB services over the copper network infrastructure with a fibre overlay (that is, the delivery of fibre based SFBB)"*[152] i.e. VULA products. TalkTalk identified a wholesale market for VULA products, distinct from the wholesale inputs used for the delivery of SBB or those used for the delivery of SFBB over the cable network.[153]

4.14 After looking at direct and indirect constraints on VULA, TalkTalk concluded that the relevant wholesale product market is likely to be the supply of VULA alone, with a low probability that it is the supply of VULA and LLU together. TalkTalk considered that it is not necessary to reach a conclusion on this as BT has a dominant position in both possible markets.[154]

4.15 BT did not comment on what it considered to be the relevant upstream market.

---

[146] 2014 FAMR Statement, paragraph 7.2.
[147] 2010 WLA Statement, paragraph 3.48.
[148] 2010 WLA Statement, paragraph 3.101.
[149] 2014 FAMR Statement, paragraphs7.62 and 7.75 to 7.76.
[150] 2010 WLA Statement, paragraph 4.29.
[151] 2014 FAMR Statement, paragraph 7.91.
[152] TalkTalk complaint (confidential), 13 March 2013, page 59, paragraph 218.
[153] TalkTalk complaint (confidential), 13 March 2013, page 60, paragraph 219.
[154] TalkTalk complaint (confidential), 13 March 2013, page 74, paragraph 289.

Ofcom's view on upstream market definition and dominance

4.16 Our starting point for the relevant upstream market definition is the market definition for wholesale local access that we adopted in our 2010 WLA Statement and also in our 2014 FAMR Statement.

4.17 We note that TalkTalk has raised the possibility of a narrower upstream market definition in relation to this investigation, which focuses only on the VULA product, where BT is currently the sole supplier.

4.18 We note that BT would be dominant on the narrower market definition proposed by TalkTalk or on the wider market definition set out in the 2010 WLA Statement and the 2014 FAMR Statement.

4.19 As our finding is that there are no grounds for action based on our assessment of BT's margins, this is unaffected by the choice of market definition. We therefore do not conclude on the upstream market definition.

WLR/WFAEL

Ofcom's position in the 2010 WFAEL Statement and the 2014 FAMR Statement

4.20 Each of BT's SFBB products are sold as part of a bundle which also includes a voice service. This voice service is delivered using wholesale line rental (WLR) as an input. Therefore, we have also considered the market definition for this input.

4.21 In the 2010 WFAEL Statement[155], Ofcom decided that there was a market for the supply of wholesale fixed analogue exchange lines (WFAEL), which lies downstream of the WLA market and uses WLA as an input. Ofcom considered that BT had SMP in that market and imposed an obligation on BT to provide network access in the form of WLR as a result of its SMP in the WFAEL market.[156]

4.22 In the 2014 FAMR Statement, Ofcom decided on the same market definition,[157] and that the obligation on BT to provide WLR should be retained.[158]

4.23 In the 2010 WFAEL Statement, Ofcom defined two geographic markets for the supply of WFAEL:

- the UK excluding the Hull Area; and
- the Hull Area.[159]

4.24 Ofcom adopted the same position on geographic market definition in the 2014 FAMR Statement.[160]

[155] 2010 WFAEL Statement, http://stakeholders.ofcom.org.uk/binaries/consultations/review-wholesale-fixed-exchange/statement/statement.pdf
[156] 2010 WFAEL Statement, paragraph 6.36.
[157] 2014 FAMR Statement, paragraph 3.92.
[158] 2014 FAMR Statement, paragraph 15.15.
[159] 2010 WFAEL Statement, paragraph 3.19.
[160] 2014 FAMR Statement, paragraph 3.81.

TalkTalk's and BT's submissions on wholesale market definition

4.25 TalkTalk did not comment directly on the market for WLR/WFAEL in the complaint. However, when assessing indirect constraints on the VULA product, TalkTalk considered that "*it is important to note that VULA is not generally purchased on its own, but is bought alongside MPF or… WLR.*"[161] It noted that VULA is always sold as part of a bundle with MPF or WLR and never as an independent product. Therefore, the price increase for a critical loss analysis should be the rise in price of the 'VULA plus MPF' bundle.[162]

4.26 BT did not comment directly on the market for WLR/WFAEL in its response. However, it noted that *"where products are sold as part of a bundle it may be appropriate to narrow or extend the focal product to include the individual products that are sold as part of the bundle."*[163]

Ofcom's view on upstream market definition and dominance

4.27 BT's SFBB products are bundled together with a voice service, which uses the WLR input. The 2014 FAMR Statement concluded that this input is part of the WFAEL market.[164] We note that both the 2014 FAMR Statement and the 2010 WFAEL Statement found that BT had SMP in this market. However, as noted above, for the purposes of this no grounds for action decision we do not need to make a definitive finding on market definition and dominance. We have therefore left this market definition open.

Relevant downstream market definition

4.28 As noted in paragraph 3.12, as part of the test for a margin squeeze, it is necessary to show that BT was active in the downstream market. However, BT does not need to be dominant in this market.

Ofcom's position in the 2010 WBA Statement and the 2014 WBA Statement

4.29 Ofcom considered the appropriate downstream retail broadband market definition in the 2010 wholesale broadband access market review (the 2010 WBA Statement),[165] and subsequently in a statement published on 26 June 2014 (the 2014 WBA Statement).[166] We consider that these provide the starting point for our analysis of the downstream market in this case.

4.30 In the 2010 WBA Statement, Ofcom defined the relevant retail product market as asymmetric broadband internet access which at a minimum provides an always on capability, allowing both voice and data services to be used simultaneously, and provides data at speeds greater than a dial up connection. This market includes services of all speeds provided over copper, cable and fibre. It excludes mobile

[161] TalkTalk complaint (confidential), 13 March 2013, page 28, footnote 45.
[162] TalkTalk complaint (confidential), 13 March 2103, page 66, footnote 141.
[163] BT response (confidential), 2 April 2013, page 11, paragraph 31.
[164] 2014 FAMR Statement, paragraph 3.63
[165] 2010 WBA Statement, http://stakeholders.ofcom.org.uk/binaries/consultations/wba/statement/wbastatement.pdf
[166] 2014 WBA Statement, http://stakeholders.ofcom.org.uk/binaries/consultations/review-wba-markets/statement/WBA-Statement.pdf

broadband, symmetric services, fixed wireless access and satellite broadband. This market includes both business and residential customers.[167]

4.31 The 2014 WBA Statement found that SFBB and SBB are in the same market. It noted that there were factors pointing to the emergence of a separate market at the retail level for fibre-based products at some point in the future but did not consider that there was sufficient evidence that this would occur during the three year review period.[168] Ofcom therefore adopts the same retail product market definition as in the 2010 WBA Statement.[169]

4.32 Insofar as the geographic market definition is concerned, the 2010 WBA Statement noted that, as the retail market definition was only used to inform the analysis of wholesale markets, it was not necessary to conclude on the precise scope of the retail geographic market.[170] The 2014 WBA Statement similarly does not conclude on the retail geographic market,[171] though it noted that it would be reasonable to suppose that the geographic pattern of retail competition would reflect the geographic variation in LLU presence and cable coverage.[172]

TalkTalk's and BT's submissions in relation to the downstream market

4.33 In its complaint, TalkTalk described the relevant retail market as involving "*the sale of broadband products to residential customers and to small businesses.*" It considered that these products may be differentiated in terms of branding, service quality, speed of downloads and uploads and the volume of data which can be transmitted each month.[173]

4.34 TalkTalk considered that at present, it is not clear whether SBB and SFBB products are in separate retail markets. However, TalkTalk believed a clear separate market will probably emerge in the next 18 months if there is not one already. TalkTalk also argued that there are likely to be asymmetries in the substitutability of SFBB and SBB retail products. That is, whilst SFBB products may constrain SBB products, the reverse is either not currently true or will cease to be true in the near future. TalkTalk argued that SBB is unlikely to constrain SFBB on the basis that SFBB is a superior product offering higher speeds and a better quality internet experience. Therefore, many consumers are likely to be reluctant to switch back to SBB after experiencing SFBB.[174]

4.35 TalkTalk argued in its complaint that it is not necessary to conclude on the retail market definition as BT is active in the provision of both SBB and SFBB products. TalkTalk considered that however the downstream retail market is defined, BT is active in the downstream market.[175]

4.36 BT argued that TalkTalk provided no real evidence to suggest that SBB and SFBB services fall into distinct markets. BT considered that TalkTalk had accepted that the

[167] 2010 WBA Statement, paragraph 3.29.
[168] 2014 WBA Statement, paragraph 3.71.
[169] 2014 WBA Statement, paragraph 3.201.
[170] 2010 WBA Statement, paragraph 3.28.
[171] 2014 WBA Statement, paragraph 4.42.
[172] 2014 WBA Statement, paragraph 4.46.
[173] TalkTalk complaint (confidential), 13 March 2103, page 57, paragraph 208.
[174] TalkTalk complaint (confidential), 13 March 2103, page 58, paragraphs 212 to 214.
[175] TalkTalk complaint (confidential), 13 March 2103, page 59, paragraph 215.

retail market is for broadband more generally.[176] BT argued that TalkTalk failed to identify a relevant downstream market as it did not identify a focal product and consider substitutes, nor did it reach a conclusion on the relevant downstream market.

4.37 In contrast to TalkTalk, BT considered that it is necessary to conclude on market definition in order to establish whether there was a margin squeeze in the market.[177] However, in its November submission, BT suggested that if profitability can be shown on the pricing of its SFBB propositions then we would not need to assess foreclosure effects from a specifically defined downstream market.[178] BT considered that the correct downstream market is one for the supply of fixed broadband services, both SBB and SFBB combined.[179]

4.38 BT argued that there is not a separate downstream market for SFBB for a number of reasons. It considered that whilst the technology used to provide SFBB is different at the wholesale level, at the downstream retail level, the service supplied is still simply broadband access but at a faster speed.[180] Furthermore, it considered that TalkTalk's case shows that Virgin Media's and BT's sales of SFBB services have been at prices broadly on a par with those for SBB services. BT argued that this shows that the availability of SBB services constrains the prices of SFBB services.[181]

4.39 BT acknowledged that the analysis would be similar if we adopted a narrower market definition which included only SFBB products, but it did not consider that such a market definition should be adopted.[182]

Ofcom's view on the downstream market definition

4.40 We consider that BT is clearly active in the downstream market whether that downstream market is defined as all retail broadband (as per the 2010 WBA Statement and 2014 WBA Statement) or SFBB only (as suggested by TalkTalk). As BT is active downstream on either of the candidate market definitions, it is not necessary to conclude on downstream market definition for the purpose of assessing a margin squeeze.

4.41 We do not consider that the downstream market definition affects any other aspect of the reasoning in this no grounds for action decision. In particular, as we explain in detail in paragraphs 5.38 to 5.53 we consider that even if there were a wide retail market definition, a margin squeeze on SFBB alone could give rise to consumer harm, and it is therefore appropriate to assess BT's margins in relation to its SFBB portfolio. Moreover, as noted in paragraph 7.54, we have not conducted any analysis for the purpose of this no grounds for action decision in relation to the potential for anti-competitive effects.

[176] BT response (confidential), 2 April 2013, page 4.
[177] BT response (confidential), 2 April 2013, page 12, paragraphs 34 to 36.
[178] BT's November submission (confidential), 22 November 2013, page 19, paragraph 4.9.
[179] BT's November submission (confidential), 22 November 2013, page 25, paragraphs 4.31 to 4.33.
[180] BT response (confidential), 2 April 2013, page 12, paragraph 37.
[181] BT response (confidential), 2 April 2013, page 13, paragraph 40.
[182] BT's November submission (confidential), 22 November 2013, page 4, paragraph 1.13.

Conclusion

4.42 We consider that BT would be dominant in the upstream market whether the upstream market is defined widely as ‘wholesale local access’ or on a narrow market definition of just VULA products. As BT appears to be dominant under either definition, and as we have concluded that there are no grounds for action based on our analysis of BT’s margins, it is not necessary for us to conclude on the market definition for the purposes of our no grounds for action decision. We also leave open our conclusion on the market definition for WLR.

4.43 Similarly, we consider that BT is active in the downstream market, whether we consider a market for SFBB or all retail broadband. Therefore, it is not necessary for us to conclude on the downstream market definition.

Section 5

Methodology for assessment of BT's margins

5.1 In this section we set out the methodology we have used to assess BT's margins in relation to the provision of SFBB services. We consider each of the following aspects in turn (noting the views of BT and TalkTalk where relevant):

- what is a margin squeeze;
- the appropriate imputation test in this case;
- the appropriate cost standard to use in this case;
- the relevant output increment for our analysis;
- the treatment of shared costs in this case;
- the wholesale products we have included in the test;
- elements of the cost and revenue stack; and
- the method we have used to assess profitability.

5.2 As noted in Section 2, we are assessing BT's margins on its February 2013 offer (before the launch of BT Sport), and its May 2013 and January 2014 offers (both including BT Sport). In this section, we explain our methodology for assessing BT's costs and revenues for items other than BT Sport. In Section 5 we set out our methodology for including the cost of BT Sport in the margin squeeze assessment.

What is a margin squeeze?

5.3 A margin squeeze occurs when a vertically integrated firm which is dominant in an upstream market sets a margin between the prices it charges its customers for a product in the downstream market and the prices it charges its competitors for wholesale inputs in the upstream market which is insufficient to cover costs in the downstream market.

5.4 In its complaint, TalkTalk alleged that in relation to SFBB, BT's retail price is less than its wholesale charges plus its downstream costs, thereby resulting in a margin squeeze by reference to the equally efficient operator test. TalkTalk considered that BT is operating a margin squeeze by setting wholesale charges which are too high and/or setting retail prices that are too low.[183]

[183] TalkTalk complaint (confidential), 13 March 2013, pages 8 to 10, paragraphs 8 to 20.

The appropriate imputation test in this case: the Equally Efficient Operator (EEO) test

5.5 A key question in a margin squeeze analysis is whose downstream costs should be considered in the calculation of the margin. The two main options are:

i) **the vertically integrated firm's costs (the 'Equally Efficient Operator' or 'EEO' test)** – this involves assessing whether the vertically integrated firm's downstream arm could operate profitably given the wholesale charges paid by downstream competitors. It tests whether equally or more efficient downstream competitors would be able to compete effectively if they had the same downstream costs as the vertically integrated firm. It is also possible to use an 'adjusted EEO' test which is based on the vertically integrated firm's own costs but makes some adjustments to reflect incumbency cost advantages that the firm may have. We consider the need to make any such adjustments separately from paragraph 5.13.

ii) **a competitor's costs (the 'Reasonably Efficient Operator' or 'REO' test)** – this involves assessing whether, given the wholesale input prices and the prices charged by the vertically integrated operator in the downstream market, a reasonably efficient operator (i.e. not the vertically integrated firm) could make sufficient profits to continue to compete. This uses the downstream costs of an operator other than the vertically integrated firm.

5.6 In its complaint, TalkTalk noted the two potential margin squeeze tests and adopted the EEO test because it was the test most frequently used by the European Commission. TalkTalk also noted that the REO test was more commonly used in the context of *ex ante* regulatory rule setting.[184]

5.7 TalkTalk also suggested that it would be appropriate for us to adopt an adjusted EEO approach in this case "to reflect the fact that the costs of a potential entrant could be higher than those of BT due to it having certain cost advantages arising from its legacy monopoly position. For example, a competitor broadband provider incurs certain costs in order to connect to BT's network that BT Retail does not incur."[185]

5.8 BT's internal compliance model (the BT Model) is based on an EEO test, which it presented in response to TalkTalk's complaint.[186] We note that the BT Model also includes a scenario for a "*Similarly Efficient Operator*" (SEO),[187] which adjusts some of the downstream costs such as connection and network costs. BT accepted in its November submission that the EEO test was to be preferred to the REO test in this case and added that the EEO test should be applied unless there were circumstances justifying the use of the adjusted EEO test.[188] BT stated that in this case there were no such reasons, because:

- wholesale input costs for all broadband providers sourcing through Openreach were provided on equivalence of inputs (EoI) terms;

[184] TalkTalk complaint (confidential), 13 March 2013, page 87, paragraph 348.
[185] TalkTalk complaint (confidential), 13 March 2013, page 88, paragraph 351.
[186] BT response (confidential), 2 April 2013, page 18, paragraph 64.
[187] BT's response to 1st s26 Notice, Q2, 13 May 2013.
[188] BT's November submission (confidential), 22 November 2013, pages 15 to 16, paragraphs 3.16 to 3.20, and page 23, paragraph 4.23.

- BT's costs upstream were precisely identifiable; and
- there was no significant difference in scale between BT and TalkTalk in the retail broadband segment.[189]

The appropriate imputation test in this case

Use of an EEO test

5.9 We have investigated a number of allegations of anti-competitive exclusionary behaviour in recent years using our *ex post* competition powers. Despite some consideration of REO cost test results, Oftel/Ofcom's primary approach in these cases has been based on an EEO methodology.[190] We also consider that it is appropriate to assess BT's margins in this case on the basis of an EEO test, primarily because BT is aware of its own costs, but not the costs of its competitors.

5.10 We note that European case law points to the EEO test being the generally appropriate legal test in margin squeeze cases. In *Deutsche Telekom*, the CJEU said:

> *"…the General Court did not err in law when it held [...] that the Commission had been correct to analyse the abusive nature of the appellant's pricing practices solely on the basis of the appellant's charges and costs.*
>
> *[…]*
>
> *Such an approach is particularly justified because [...] it is also consistent with the general principle of legal certainty in so far as the account taken of the costs of the dominant undertaking allows that undertaking, in the light of its special responsibility under Article 82 EC,[[191]] to assess the lawfulness of its own conduct. While a dominant undertaking knows what its own costs and charges are, it does not, as a general rule, know what its competitors' costs and charges are."*[192]

5.11 Similarly, in *Telefónica*, the General Court noted that:

> *"The validity of [the EEO] approach is reinforced by the fact that it also conforms to the general principle of legal certainty, since taking into account the costs and prices of the dominant undertaking enables that undertaking, in the light of its special responsibility under Article 82 EC, to assess the lawfulness of its own conduct.*

[189] BT's November submission (confidential), 22 November 2013, page 23, paragraph 4.23.
[190] For further details see Case CW/988/06/08 *Complaint from THUS plc and Gamma Telecom Limited against BT about alleged margin squeeze in Wholesale Calls pricing* (2013), paragraph 6.72, http://stakeholders.ofcom.org.uk/binaries/enforcement/competition-bulletins/closed-cases/all-closed-cases/cw_988/final.pdf
[191] Now Article 102 TFEU.
[192] Case C-280/08 *Deutsche Telekom AG v Commission* [2010], paragraphs 200 and 202.

> *While a dominant undertaking knows its own costs and prices, it does not as a general rule know those of its competitors."*[193]

5.12 Reflecting this stance by the European Courts, both the European Commission and UK competition authorities have used the EEO test in margin squeeze cases.[194] Furthermore, the European Commission's 2008 Guidance on Article 82 (now Article 102 TFEU) refers to an "*as efficient competitor*" when considering the application of the margin squeeze test.[195]

Adjustments to the EEO test

5.13 We have also considered whether it is appropriate to make any adjustment to the EEO approach to take into account any incumbency advantages of the dominant undertaking, as suggested by TalkTalk.

5.14 We note that the General Court in *Deutsche Telekom* (subsequently upheld by the CJEU) and the CJEU in *TeliaSonera* does support the use of the adjusted EEO test in appropriate circumstances.

5.15 *TeliaSonera* states that:

> *"...it cannot be ruled out that the costs and prices of competitors may be relevant to the examination of the pricing practice at issue in the main proceedings. That might in particular be the case where the cost structure of the dominant undertaking is not precisely identifiable for objective reasons, or where the service supplied to competitors consists in the mere use of an infrastructure the production cost of which has already been written off, so that access to such an infrastructure no longer represents a cost for the dominant undertaking which is economically comparable to the cost which its competitors have to incur to have access to it, or again where the particular market conditions of competition dictate it, by reason, for example, of the fact that the level of the dominant undertaking's costs is specifically attributable to the competitively advantageous situation in which its dominant position places it."*[196]

---

[193] Case T-336/08 *Telefónica v Commission* [2012], paragraph 192.

[194] For example, in CA98/20/2002 *BSkyB investigation: alleged infringement of the Chapter II Prohibition,* (2002), the OFT stated that "*BSkyB should ensure that the margin between the prices it sets… is sufficient at least to cover its own costs of transformation*" referring to the "*as efficient distributor*" i.e. an equally efficient operator (paragraph 369, see also paragraph 362). The UK Court of Appeal in *Welsh Water v Albion Water* [2008] EWCA Civ 536, paragraph 80, also adopted an EEO methodology, following the General Court's judgment in Case T-271/03 *Deutsche Telekom AG v Commission* [2008]. In Case COMP/38.784 *Wanadoo España v Telefónica* [2007], paragraph 399, the European Commission relied on the '*as efficient competitor test*' i.e. an equally efficient operator. See also, Case T-336/07 *Telefónica v Commission* [2012], paragraph 192.

[195] See Communication from the Commission: Guidance on the Commission's enforcement priorities in applying Article 82 of the EC Treaty to abusive exclusionary conduct by dominant undertakings, OJ C45/7, 24.2.09, paragraph 67.

[196] Case C-52/09 *Konkurrensverket v TeliaSonera Sverige AB* [2011], paragraph 45.

5.16 In *Deutsche Telekom* the European Commission included one-off charges for discontinuance in its cost stack as part of the wholesale charges, which were paid by competitors to the incumbent, but which were not paid by the incumbent itself.[197]

5.17 Ofcom has previously made adjustments to the vertically integrated firm's own downstream costs to take into account wholesale specific costs, e.g. in *Gamma Telecom* and *THUS Gamma*, where an adjustment was made to take into account CPS transfer charges.[198] In this case, we have considered three specific types of possible adjustment.

5.18 First, we have considered whether to use, as TalkTalk suggested, the metallic path facility (MPF) product rather than the WLR product, and if so, whether to make any adjustments on the basis of the costs associated with the wholesale products purchased by BT's competitors (which are likely to be readily identifiable to BT). As set out in paragraph 5.93, the wholesale costs of providing SFBB services are WLR or MPF and GEA connection and rental charges which are all payable to Openreach. These charges are subject to an EOI condition, meaning that all CPs (including BT Consumer) will pay the same amount for the supply of these services.

5.19 We note that both connection and ongoing costs will vary depending on whether an operator uses WLR or MPF. BT currently provides SFBB using WLR as a wholesale input, whereas TalkTalk generally uses MPF.

5.20 As discussed in paragraphs 5.93 to 5.95, we consider that BT's total costs associated with its choice of wholesale inputs are likely to be higher than other CPs' costs because it uses WLR rather than MPF.[199] In this regard therefore, an EEO test which uses BT's own WLR rather than MPF costs is more difficult for BT to pass and so is sufficient, in the context of a NGFA decision, to assess whether equally or more efficient downstream competitors would be prevented from competing effectively.

5.21 Second, we have considered whether it is appropriate to make any adjustment to the EEO approach in relation to potential economies of scale and scope that BT may benefit from relative to its competitors, enabling it to incur lower unit costs (for example) in relation to backhaul and core network costs.

5.22 Even if it could be shown that any downstream cost advantages that BT gains were specifically attributable to its dominant position, we would be reluctant to make adjustments where BT does not know its competitors' equivalent downstream costs. We do not consider that BT would be able to reliably estimate the network costs of its competitors. This is an important difference compared to adjustments that reflect additional wholesale charges that are known to the incumbent.

5.23 [✂]. Therefore we have not made any adjustments to BT's costs and have carried out an assessment of BT's downstream costs for supplying retail SFBB services on the basis of the EEO test.

---

[197] Case T-271/03 *Deutsche Telekom AG v Commission* [2008], paragraph 210.

[198] *Complaint from Gamma Telecom against British Telecommunications Group plc ("BT") about reduced rates for Wholesale Calls from 1 December 2004* (2005), paragraph 57, http://www.oft.gov.uk/shared_oft/ca98_public_register/decisions/gamma.pdf; Case CW/988/06/08 *Complaint from THUS plc and Gamma Telecom Limited against BT about alleged margin squeeze in Wholesale Calls pricing* (2013), paragraphs 6.80 to 6.81.

[199] This is because the Openreach WLR rental price is generally higher than the MPF rental price and there are higher WLR connection costs for customers who need to be provided with a new line (e.g. customers acquired from Virgin Media), relative to the equivalent MPF connection costs.

5.24 We note that a similar issue in relation to whether it would be appropriate to make adjustments for potential economies of scale and scope arose in *Telefónica*. That case acknowledged that a 'hypothetical equally efficient competitor test' was more favourable to Telefónica than the 'hypothetical reasonably efficient competitor test', given the economies of scale and scope of Telefónica. The European Commission noted that a reasonably efficient competitor which does not enjoy the same economies of scale as those enjoyed by Telefónica "*inevitably has higher unit network costs*"[200] but nevertheless applied the EEO test.

5.25 Third, we considered whether to make an adjustment to BT's call revenues. In its August submission, TalkTalk claimed that BT customers' call usage and therefore BT's call revenues were different from those a rival would enjoy.[201] TalkTalk claimed that BT has a base of legacy customers who make a very high volume of calls. TalkTalk submitted that these customers are not contestable by rivals and therefore should be excluded from the EEO test. TalkTalk considered that adjusting for this would not require BT to have knowledge of its competitors' revenues, as the test could be conducted based on the usage of BT customers that have been with BT for less than either 5 or 8 years.[202]

5.26 We do not consider it appropriate to make such an adjustment to BT's call revenues. We note that our approach is consistent with the relevant case law, which has used the prices and costs of the dominant firm.

5.27 Furthermore, we note that the OOP call revenue we have used is based on data for SFBB customers only, and the act of upgrading from SBB to SFBB suggests that these are not passive customers. Even if it could be shown that some of BT's customers were harder for BT's competitors to win than others, and that such customers had a particular propensity towards different calling patterns (or some other usage characteristic), we would not necessarily consider it appropriate to deviate from the EEO test for the purpose of our assessment in this case, noting in particular that the existence of any such group of customers may not be related to BT's dominant position in the upstream market nor any legacy position in the downstream market.

The appropriate cost standard in this case: long run incremental cost (LRIC)

5.28 In order to carry out a comparison of the vertically integrated firm's downstream costs and revenues, it is important to establish the relevant cost standard. In its complaint, TalkTalk estimated BT's costs using the cost standard of long run incremental cost (LRIC).[203] Similarly, BT considers that competition law assessments of margin

[200] Case COMP/38.784 *Wanadoo España v Telefónica* (2007), paragraph 314.
[201] TalkTalk argued that Ofcom has indicated (in the context of the current VULA margin squeeze consultation) that BT achieves out of bundle call revenue in excess of [✂] per customer month. This is said to be higher than TalkTalk's revenue. For example, TalkTalk refers to its Simply Broadband (which has no bundled calls) customers generate out of bundle call revenue of about £[✂]. The out of bundle call revenue if weekend calls were bundled (as for Infinity) would be less. Given that TalkTalk's prices are similar to those of BT TalkTalk concludes that this implies that BT customers make more out of package calls.
[202] TalkTalk uses both 5 years and 8 years in its comments on the Provisional Decision, TalkTalk's August submission (confidential), 28 August 2014, paragraphs 1.13 and 3.28, and footnote 27.
[203] TalkTalk complaint (confidential), 13 March 2013, page 88, paragraph 349.

squeeze should be carried out on an avoidable cost or long run incremental cost basis.[204]

5.29 For the reasons set out below, we consider that the appropriate cost standard to assess BT's margins in this *ex post* case is LRIC. This is the cost of producing a specified additional product, service or increment of output in the long run.

5.30 In many cases, the relevant increment may be the entire output of a particular service or group of services. The incremental costs of a service are then those costs which are caused by the provision of that service in addition to the other services which the firm also produces. Another way of expressing this is that the incremental costs of a service are the difference between the total costs if the service is provided and the total costs if the service is not provided.

5.31 We consider it appropriate in this case to focus on the minimum measure of costs that would enable an EEO to compete against BT in the long run. Any price above a LRIC measure of costs would increase the profits of the EEO relative to not producing and selling the increment of output and would therefore allow it to compete. Conversely, a price below LRIC would not be consistent with sustainable competition in the long-term. We therefore use LRIC as the relevant cost floor, and consider that this provides the appropriate basis for a test of whether BT's prices could have been sustainably matched by an equally efficient competitor. Ofcom has recently used the LRIC cost standard in its margin squeeze assessment in *THUS Gamma* based on this reasoning.[205]

5.32 The use in telecoms cases of LRIC as the appropriate cost standard for considering an *ex post* margin squeeze is also supported by the European Commission in its 2008 Guidance on Article 82 (now Article 102 TFEU)[206] and in its decisions. For instance, in *Telefónica*, the European Commission found:

> *"…in accordance with the economic theory and with the practice of the Commission on margin squeeze where the ability of competitors to operate profitably in the long term was assessed, the relevant cost measure for the assessment of a margin squeeze in the telecommunications sector is the long run average incremental costs (LRAIC)."*[207]

5.33 Long run incremental costs include the increase in shared costs resulting from the provision of the output increment in question, and we therefore include them in our assessment of BT's margins. As explained in *Telefónica*:

> *"The long run incremental cost of an individual product refers to the product-specific costs associated with the total volume of output of the relevant product ... Such costs include not only all volume sensitive and fixed costs directly attributable to the production of the*

[204] BT's response to 2nd s26 Notice, Q1, 12 June 2013.
[205] Case CW/988/06/08 *Complaint from THUS plc and Gamma Telecom Limited against BT about alleged margin squeeze in Wholesale Calls pricing* (2013), paragraphs 6.28 to 6.33.
[206] See Communication from the Commission: Guidance on the Commission's enforcement priorities in applying Article 82 of the EC Treaty to abusive exclusionary conduct by dominant undertakings, OJ C45/7, 24.2.09, paragraph 80.
[207] Case COMP/38.784 *Wanadoo España v Telefónica* (2007), paragraph 318. LRAIC and LRIC represent similar concepts as the former is the LRIC divided by the quantity of the long run increment.

> *total volume of output of the product in question but also the increase in common costs that is attributable to this activity."*[208]

5.34 If the incremental costs of each service are removed from the total cost of providing all services, what are left are the common costs.[209] Common costs are those which arise from the provision of a group of services but which are not incremental to the provision of any individual service.

5.35 There are other measures of long run costs which include an element for the recovery of non-attributable common costs, for example, LRIC plus a mark-up for the recovery of common costs (a so-called LRIC+ approach) or fully allocated cost (FAC). Since a FAC or LRIC+ approach includes an element for recovery of common costs, a margin squeeze test based on a FAC or LRIC+ approach would set a higher standard for a dominant firm to pass compared to a LRIC approach.

5.36 We discuss the methodological approach to measuring incremental costs and how we have taken 'shared' costs and common cost recovery into account in paragraphs 5.76 to 5.92 (and a more detailed explanation is provided in Annexes 1 and 2).

The relevant output increment in this case

5.37 In order to estimate the relevant LRIC for our analysis we first consider the relevant output increment, i.e. the appropriate level of retail product aggregation at which to apply the test in this case. In this subsection we consider the following issues:

- whether the assessment should be carried out based on SFBB or the whole broadband market (including ADSL-based services);
- the level of aggregation by retail product; and
- the inclusion of TV.

Assessment on SFBB or the whole broadband market

5.38 In deciding the relevant output increment in this case our starting point has been the competitive conditions of the relevant retail market – the supply of broadband services to residential customers and businesses. We first consider the parties' submissions. We then consider competition across different speeds, including the current situation and future developments, and discuss the assessment of price-based exclusionary conduct under Article 102 TFEU in fast-growing markets.

5.39 In the complaint, TalkTalk assessed BT's margins on SFBB rather than the whole broadband market. It considered whether it would be appropriate to classify SBB and SFBB as falling in separate markets for the purpose of assessing the alleged margin squeeze. It said that it is not clear at this stage whether SBB and SFBB products fall within distinct and separate retail markets but argued that there are likely to be asymmetries in the substitutability of SFBB and SBB retail products.[210] TalkTalk

[208] Case COMP/38.784 *Wanadoo España v Telefónica* (2007), paragraph 319.
[209] *Telefonica* distinguishes between 'attributable' common costs (which are included in LRIC) and 'non-attributable' common costs (which are not included in LRIC). In this decision, we make a similar distinction but refer to 'shared costs' instead of 'attributable common costs'.
[210] TalkTalk complaint (confidential), 13 March 2013, page 58, paragraphs 212 to 213.

argued that because SFBB is the focal product in the context of the complaint (and the subsequent investigation), it may not be appropriate to include SBB in the relevant market. It explained that this is because, in TalkTalk's view, whilst SFBB products may constrain SBB products, the reverse is either not true or will cease to be true in the near future. TalkTalk concluded that, if it has not already happened, a clear separate market for SFBB will probably emerge in the next 18 months.[211]

5.40 In the BT response, BT argued that a proper assessment of the relevant downstream market would show that the narrowest plausible definition is that there is a single retail broadband market. It therefore argued that the appropriate focal product should be the aggregate of all services that include broadband services offered by BT,[212] that is, both SBB and SFBB, because that is the "*arena over which competition occurs and over which exclusion of competitors might occur*".[213]

5.41 Ofcom's 2014 WBA Statement considered the competitive conditions across different broadband speeds in some detail, and we therefore have regard to the analysis in that document. Ofcom's pricing analysis found that retail prices increase only gradually with speed and there is at present no clear break in the chain of substitution between different service speeds.[214] In addition, it found that while demand for high bandwidth applications, like online TV services, has increased significantly, there were few devices or applications that required SFBB speeds in order to work effectively. On this basis, Ofcom came to the view that SFBB is not yet a separate retail market.[215]

5.42 However, the 2014 WBA Statement also presented evidence which suggested that SFBB was becoming increasingly differentiated from SBB:

i) Ofcom considered that at present the main advantage of a SFBB service is that it may facilitate a better user experience in relation to some devices or applications. As an example, it noted that viewing of linear HD broadcasting online may be somewhat constrained on Current Generation Access (CGA) and pointed to evidence[216] which suggests that the adoption of SFBB appears to result in users spending more time on applications already used with CGA.[217]

ii) Ofcom considered that although there are currently very few applications which individually require SFBB speeds (e.g. ultra HD or linear 3D), several internet-enabled devices served by the same broadband connection may be constrained by slower speeds if used simultaneously.[218] The 2014 WBA Statement noted that the average UK household owns three different types of internet-enabled device, and 74% have at least two. If multiple people in a household were using high bandwidth applications, in particular for watching IPTV, SBB speeds may not provide an acceptable service for all.

[211] TalkTalk complaint (confidential), 13 March 2013, page 58, paragraph 214.
[212] BT response (confidential), 2 April 2013, page 12, paragraph 36.
[213] BT's response to 2nd s26 Notice, Q1, 12 June 2013.
[214] 2014 WBA Statement, paragraphs 3.30 to 3.71.
[215] 2014 WBA Statement, paragraph 3.71.
[216] 2011 Ofcom Communications Market Report (Figure 5.13). http://stakeholders.ofcom.org.uk/market-data-research/market-data/communications-market-reports/cmr11/
[217] 2014 WBA Statement, paragraphs 3.56 to 3.58.
[218] 2014 WBA Statement, paragraph 3.59.

iii) Ofcom considered that Enders Analysis' April 2013 findings that *"[EE] was quite positive on consumer demand for high speed, stating that resistance to paying a premium has come down significantly over the last year, and that it would be marketing fibre products more aggressively in the rest of the year*" suggested an increasing differentiation between CGA and NGA in the eyes of retail consumers.[219]

5.43 The 2014 WBA Statement went on to consider future developments. It found that the evidence suggested that consumer requirements for speed are likely to increase in the future, and that this could potentially result in a lessening in the substitutability of SFBB and SBB services for consumers. For example, sales of internet-enabled TVs, tablets and computers are set to rise. This could increase simultaneous viewing of catch-up TV, meaning fibre-based broadband could be required by more households, in order to satisfy their increased needs.[220]

5.44 Ofcom also recognised that more consumers may regard SFBB services as necessary in future and that there may be an 'endowment effect' that means that consumers would be reluctant to trade down once they had experienced SFBB. Nonetheless, the 2014 WBA Statement concluded that the speed and extent of transition to SFBB over the period of the review is subject to significant uncertainty. The consensus view from forecasts is that a significant proportion of connections are likely to be superfast by 2017.[221]

5.45 We consider that the evidence presented above indicates that SFBB and SBB are becoming increasingly differentiated and that a separate SFBB market may emerge at some point in the future. We note an Enders report of February 2013 which said:

> *"The adoption rate of [SFBB] is accelerating even though penetration is quite high already, suggesting that it is receiving good word-of-mouth and that it is far from niche interest, with eventual adoption likely to be well over 50%. We continue to believe that the current high speed standard (30Mbit/s) will become the new normal over the next few years, but this is not yet happening outside BT and Virgin Media."*[222]

5.46 In its August submission, BT argued that the relevant downstream market for the purposes of this margin squeeze investigation should be all broadband. BT argued that the notion of a separate SFBB market is at odds with the conclusion in the 2014 FAMR Statement, which states that there is insufficient evidence for a separate market emerging in the next market review period, i.e. until 2017.[223] BT also argued that to consider that a separate SFBB market may emerge ignores the conclusions in the WBA Statement that such a development is unlikely to have occurred at the end of the next *ex ante* review period, in three years' time. As such, BT contended that Ofcom should not make speculative considerations of future developments in the market.[224]

[219] 2014 WBA Statement, paragraph 3.65.
[220] 2014 WBA Statement, paragraph 3.67.
[221] 2014 WBA statement, paragraphs 3.68 to 3.69.
[222] Enders Analysis, BT Q3 2012/13 results: Fibre take-up accelerates, but sports costs loom, 5 February 2013, pages 2 to 3.
[223] BT's August submission (confidential), 6 August 2014, paragraph 4.8.
[224] BT's August submission (confidential), 6 August 2014, annex, page 4.

5.47 BT claimed that not concluding on the relevant downstream market in this way leads Ofcom to draw conclusions about the nature of retail competition that are inaccurate and/or speculative, in particular by not specifying precisely when it expects that the majority of broadband connections will shift to SFBB. BT considers that there was a single retail market for all broadband services in the period covered by this investigation and that it expects this to be the case until at least 2017.

5.48 BT claimed that harm in the SFBB segment does not equate to harm in the wider broadband market. It argued that if BT failed 'on the numbers', this would not have been a strong indicator of anti-competitive foreclosure given that there is a single retail market for broadband. BT noted that Ofcom should acknowledge that any forward-looking effects analysis would need to balance considerations about the development of SFBB demand against the expectation that until at least 2017 SBB and SFBB will be in the same market.

5.49 We consider that the increase in the demand for bandwidth over the coming years and the fact that SFBB is a qualitatively superior product means that consumers will increasingly view SFBB as the standard for broadband. Just as narrowband services were gradually replaced by ADSL and ADSL by ADSL2, we expect that at some point in the future the majority of broadband connections will be at speeds of 30Mbit/s or greater (i.e. SFBB). We do not consider it necessary to be able to predict precisely when this may happen; it is sufficient to note that the increasing importance of SFBB may result either in a separation of markets or SFBB becoming an increasingly important part of the wider broadband market at some point in the future. In either scenario, effective competition in SFBB, during this critical period where consumers are upgrading their service, will be important for the overall future competitiveness of retail broadband.

5.50 We note that in *Telefónica*, the European Commission explained why it might be appropriate to assess an output increment that is narrower than the relevant market because there is a segment of the market that is expected to grow in the future:

> *"In some circumstances, it may be appropriate to conduct the test at the level of each individual offer. This would be the case for a new offer giving rise to a margin squeeze, which is currently subsidised by other profitable offers but whose volumes could increase substantially in the future, subsequently leading to an overall negative margin in the future."*[225]

5.51 Moreover, we consider that the very nature of the market conditions in the present case reinforces the need to conduct the margin squeeze test at the level of the SFBB portfolio. In *Wanadoo*, the European Commission clarified the need for the enforcement of competition rules, and in particular the application of Article 102 TFEU (at that time Article 82 EC Treaty) in growth sectors:

> *"...nothing in Article 82 of the Treaty or in the Community case-law on the subject provides for an exception to the application of the competition rules to sectors which are not yet fully mature or which are considered to be emerging markets. To subordinate the application of the competition rules to a complete stabilisation of the market would be to deprive the competition authorities of the power to act in time before the abuses established have exerted their full*

[225] Case COMP/38.784 *Wanadoo España v Telefónica* (2007), paragraph 387.

> *effect and the positions unduly acquired have thus been finally consolidated."*[226]

5.52 More recently, in *TeliaSonera*, the CJEU explained the importance of taking action under Article 102 TFEU quickly in rapidly growing markets:

> *"... Particularly in a rapidly growing market, Article 102 TFEU requires action as quickly as possible, to prevent the formation and consolidation in that market of a competitive structure distorted by the abusive strategy of an undertaking which has a dominant position on that market or on a closely linked neighbouring market, in other words it requires action before the anti-competitive effects of that strategy are realised."*[227]

5.53 In this case, we consider that it is appropriate to consider BT's margins on SFBB. We consider that if the margins on BT's SFBB products were less than LRIC, then equally efficient competitors may be foreclosed from providing SFBB services, which are expected to grow rapidly over the next few years and may become the predominant form of broadband or even a separate market in the future. If equally efficient competitors are unable profitably to provide SFBB services during this growth phase, then there is a risk that the development of a competitive market may be prevented. Given our finding that BT's margins are sufficient to cover its downstream costs, we have not conducted an analysis of anti-competitive effects for the purpose of this decision, and therefore have not reached a view as to the extent to which this point may be relevant to any such analysis.

Retail Product Aggregation

5.54 Having decided that it is appropriate to assess BT's margins on its SFBB services, we considered the level of aggregation at which to assess the margins on BT's SFBB product offering.

5.55 We identified three output increment classifications that could be considered relevant in this case:

i) individual 'product' test – the products (or propositions) that are provided to customers which are broadly differentiated by download speeds, usage limits and bundled services (e.g. BT Infinity 1, Unlimited BT Infinity 2, Unlimited BT Infinity 1 + TV Essentials etc);

ii) individual 'product group' test – the grouping of the individual products offered by BT into the following categories: (i) stand-alone SFBB product packages, (ii) SFBB and voice product packages (dual-play products), and (iii) SFBB, voice and TV product packages (triple-play products); and

iii) total 'SFBB portfolio' test – the entire portfolio of products that include SFBB services that is provided to customers. The analysis at this level would consider whether the revenues earned from a weighted average of the portfolio of BT's retail products that include SFBB services exceeded the incremental costs of providing that portfolio.

[226] Case COMP/38.233 *Wanadoo Interactive*, (2003), paragraph 301.
[227] Case C-52/09 *Konkurrensverket v TeliaSonera Sverige AB* [2011], paragraph 108.

5.56 In its complaint, TalkTalk undertook its 'bottom-up' profitability assessment on the BT Infinity 1 product (on the basis of both a dual-play and a triple-play offer). TalkTalk argued that this output increment was particularly suitable for considering a margin squeeze against TalkTalk:

> "*[BT Infinity 1] is BT's entry-level SFBB product. It is particularly suitable for considering a margin squeeze against TalkTalk because* [✂]"[228]

5.57 While the BT Model assesses a range of increments, such as individual SFBB propositions and aggregated SFBB propositions, BT did not consider that it would need to pass margin squeeze tests with respect to each and every such proposition. Its view was that it would be more appropriate to consider margins made on propositions across the overall broadband portfolio, including both SBB and SFBB. It considered that "*[t]esting at levels beneath the level of the arena where competition takes place – and, in particular, at the highly disaggregated level of individual propositions*" would not ultimately be informative as to whether its competitors, which it noted were able to and did provide a wide variety of broadband offerings, would likely be excluded or weakened.[229]

5.58 In its August submission, TalkTalk argued that we should adopt a product-by-product assessment based on five product groups: Infinity 1; Infinity 1 Unlimited; Infinity 2; PlusNet Unlimited Fibre; PlusNet Unlimited Fibre Extra.[230] TalkTalk sets out three forms of anti-competitive and welfare harming outcomes that it argued result from adopting a portfolio approach to our assessment.[231]

5.59 Firstly, TalkTalk argued that such an approach allows BT to retail some products below wholesale charges plus LRIC. TalkTalk claimed that such below LRIC retail prices, were anti-competitive and could never be justified particularly when practised by a dominant firm. TalkTalk further contended that Ofcom has not advanced any pro-competitive or economic efficiency rationale for pricing below LRIC.[232]

5.60 Secondly, TalkTalk argues that a portfolio approach would result in a margin squeeze if BT's SFBB customer mix includes inert, and therefore, non-contestable customers who tend to use high-margin products such as Infinity 2. It argued that since competitors could not access these non-contestable customers, even if BT has a positive margin based on a portfolio approach, competitors could be subject to a margin squeeze in respect of contestable customers.[233]

5.61 Thirdly, TalkTalk argued that a portfolio approach would allow BT to set different margins for different products which can be used anti-competitively. TalkTalk contended that BT's strategy appears to be to retail some products below LRIC ('entry level' products such as Infinity 1) and some above LRIC ('higher end' products such as Infinity 2). This, they suggested was part of a strategy aimed at unfairly squeezing its main competitors out of the market.[234] TalkTalk contended that as each of BT's main rivals has a distinct customer focus [✂], BT is able to target each operators' customers. It considered that, as BT serves the whole of the market (a proportion of which is not closely competed by any rival), it is able to make higher

[228] TalkTalk complaint (confidential), 13 March 2013, page 88, paragraph 350.
[229] BT's response to 2nd s26 Notice, Q1, 12 June 2013.
[230] TalkTalk's August submission (confidential), 29 August 2014, paragraphs 3.50 and 3.64.
[231] TalkTalk's August submission (confidential), 29 August 2014, paragraph 3.51.
[232] TalkTalk's August submission (confidential), 29 August 2014, paragraph 1.6.
[233] TalkTalk's August submission (confidential), 29 August 2014, paragraph 1.7.
[234] TalkTalk's August submission (confidential), 29 August 2014, paragraph 1.8.

margins on customers who do not fall into these categories (i.e. high willingness to pay customers with little interest in sport).[235]

5.62 While we acknowledge that some of BT's competitors' (including TalkTalk's) customer bases may have different characteristics to BT's customer base, we note that all SFBB providers offer a range of SFBB packages which vary by speed and value-added features. We consider it appropriate for our test to allow competitors to compete for the portfolio of BT's SFBB services as a whole.[236] While any firm may decide to price some products more aggressively to target particular groups of customers, as long as BT's SFBB portfolio is earning revenues that exceed the LRIC of that portfolio, then an operator which is at least as efficient as BT could compete for the entire SFBB portfolio.

5.63 We note that an aggregated approach was adopted by the European Commission in the *Deutsche Telekom* and *Telefónica* cases for similar reasons:

> *"The method used to determine whether there is a margin squeeze in this case is based on the principle that the established operator's tariff structure must enable competitors to compete with that operator effectively, and at least to replicate the established operator's customer pattern."*[237]
>
> *"In the case at hand, the margin squeeze test has been conducted on the basis of an aggregated approach, i.e. on the basis of the mix of services marketed by Telefónica on the relevant retail market. This approach (referred to as the "aggregated approach") is based on the principle that competitors must at least be able to profitably replicate Telefónica's product pattern ... The aggregated approach is consistent with a new entrant's internal decision making process in that it assesses the profitability of its investment in a network by considering the complete range of products that it is able to offer in the relevant downstream market."*[238]

5.64 The specific circumstance identified in *Telefónica* where it would be appropriate to conduct a test at the level of each individual offer[239] is not applicable in this case as there is no evidence to suggest that one of BT's SFBB products is likely to grow disproportionately relative to the other products.

5.65 We do not consider that TalkTalk's specific concern (that BT has 'inert' customers that tend to use Infinity 2 and that BT uses high margins on these customers to allow it to retail Infinity 1 below LRIC) provides a compelling reason to use a narrower increment than the SFBB portfolio. This is for two reasons.

5.66 First, TalkTalk has not provided any evidence for its assertion that BT has a non-contestable customer base that purchases higher margin products such as Infinity 2.

---

[235] TalkTalk's August submission (confidential), 29 August 2014, paragraph 1.9.

[236] We also note that assessing individual offers would require estimates of the LRICs of those offers. In the presence of common costs, the LRICs of individual offers may be lower than the LRIC for the portfolio overall. Therefore, carrying out the test using a portfolio approach gives the EEO more freedom to price strategically in response to demand conditions and investment opportunities.

[237] Case COMP/C-1/37.451, 37.578, 37.579 *Deutsche Telekom AG* [2003], paragraph 127.

[238] Case COMP/38.784 *Wanadoo España v Telefónica* (2007), paragraph 388.

[239] Case COMP/38.784 *Wanadoo España v Telefónica* (2007), paragraph 387. The specific circumstance identified is where there is a new offer (potentially giving rise to a margin squeeze at the level of the individual offer) whose volumes could increase substantially in the future, subsequently leading to an overall negative margin in the future.

We note that BT has only provided SFBB products since 2010, and therefore all BT Infinity customers have taken an active decision in the last few years to upgrade from SBB to SFBB, which seems inconsistent with characterising them as 'non-contestable customers'.

5.67 Second, we have calculated the margins on each Infinity product, taking into account their different prices, as well as their respective bandwidth costs, but assuming the same share of fixed and shared costs for each product. Contrary to TalkTalk's hypothesis,[240] testing BT's margins on the Infinity 1 product would result in a margin above LRIC (and a greater margin than for the SFBB portfolio as a whole).[241] This assumes the same treatment of common costs as under the portfolio approach.[242] If we were to assess BT's margins on a product-by-product basis, less of the common costs would be incremental to the individual products, so BT's margins on Infinity 1 would likely be even higher.

Inclusion of Voice and TV

5.68 Our output increment includes voice services (i.e. line rental and telephone calls) as these are typically bundled with SFBB, as described in Section 2 and Annex 1 (see especially Tables A1.1, A1.2, A1.20, A1.21, A1.24 and A1.25). This is consistent with the approach in BT's Model[243] as well as the assessment provided in TalkTalk's complaint.[244]

5.69 We also include SFBB customers that purchase Pay TV from BT (these are 'triple-play' customers, as opposed to 'dual-play' customers that take broadband and voice services).[245] Triple-play customers accounted for around [✂] per cent of BT's SFBB portfolio at the end of BT's 2012/13 financial year.[246]

5.70 In its complaint, TalkTalk did not consider it appropriate to include TV as it argued that case law suggests that Ofcom may consider the existence of a margin squeeze in relation to access alone. TalkTalk carried out an analysis of the margin on BT's entry level triple-play product (Unlimited BT Infinity 1 plus TV Essentials) but it did not accept that this is an appropriate basis on which to evaluate a margin squeeze. It carried out the analysis to assess a potential explanation for BT's alleged abusive pricing (that dual-play SFBB packages are being sold to drive demand and margin for triple-play products).[247]

5.71 BT argued that the BT Model was designed to assess the unit incremental customer lifetime profitability of fibre services provided within stand-alone and dual-play propositions. It said that the provision of additional TV services was a 'bolt on' and

[240] TalkTalk's August submission (confidential), 29 August 2014, paragraph 3.51.
[241] We have calculated that the headroom (including BT Sport costs) for Infinity 1 was: +£[✂] for the February 2013 offer, +£[✂] to +£[✂] for the May 2013 offer and +£[✂] to +£[✂] for the January 2014 offer.
[242] If we were to conduct a margin squeeze test on individual products, then the level of LRIC would need to be the specific LRIC for that increment. We have assessed LRIC at the level of the overall SFBB portfolio. This includes some costs which are incremental to the SFBB portfolio in the long-run but which may not be incremental for individual SFBB products e.g. accommodation costs for retail employees.
[243] BT's response to 1st s26 Notice, Q2, 13 May 2013.
[244] TalkTalk complaint (confidential), 13 March 2013, pages 89-97, paragraphs 355-378.
[245] We set out our approach to incorporating BT TV in the margin squeeze assessment in Annex 1.
[246] BT's response to 1st s26 Notice, Q1, 20 May 2013.
[247] TalkTalk complaint (confidential), 13 March 2013, page 100, paragraph 393.

that pricing decisions for TV services were taken on a stand-alone basis reflecting unit economics and expected overall impact on TV profitability.[248]

5.72 BT also claimed that its TV services could be distinguished from other voice-related 'add ons', in that it is an entirely new service, facing severe competitive disadvantages, rather than constituting an inherent and homogenous part of BT's core dual play offering.[249]

5.73 BT has argued that including its TV services in our tests conflates separate product markets and fails to acknowledge the differences in the nature of competition for the provisions of triple play services as compared with dual play services. BT also noted that this approach does not recognise that [✂]. Finally, BT noted that Ofcom's use of unit costs based on current volumes for Pay TV fails to reflect BT's position as a recent entrant in the provision of Pay TV services, whose business is growing.[250]

5.74 For the purpose of this no grounds for action decision, we include Pay TV in our analysis on the basis that BT TV is retailed as an add-on that can only be purchased by BT broadband subscribers and so we consider that it constitutes part of BT's offering to broadband subscribers. If triple-play packages were not taken into account BT would then appear to be setting an adequate margin, based solely on its dual-play packages. However, assessed on an aggregate basis (i.e. looking across both dual play and triple play in aggregate) the margin could be negative. As a result, other operators would be unable profitably to replicate BT's SFBB retail product portfolio.

5.75 Our treatment of BT TV is also consistent with our inclusion of other chargeable 'add-ons' to the core SFBB product, such as out-of-bundle calls and, from 4 January 2014, charges for the BT Answer 1571 answer phone service and for BT Privacy with Caller Display. We include the margins that BT makes on these features as part of its margins on the supply of SFBB. We note BT's arguments on this point. However, given that we have found no grounds for action based on our assessment of BT's margins, [✂], we do not consider it necessary to reach a decision as to the merits of these arguments.

Treatment of shared and common costs

5.76 As noted at paragraphs 5.28 to 5.36, LRIC should include fixed and variable costs which are incremental to BT's SFBB portfolio and not those which would remain invariant in the long run if BT were to cease to offer SFBB. In some cases we may also conduct an additional 'combinatorial' test in order to ensure that mark-ups over LRIC across a full range of services are sufficient to recover the common costs that support those services. [251]

5.77 In practice, costs are typically not recorded in firms' accounting systems in a manner that is consistent with the economic definition of costs (i.e. accounting systems do not explicitly define costs in terms of 'incremental' and 'common'). Figure 5.1 provides an illustration of the cost categories we have assessed in this investigation, based on the information provided by BT. Although there are some costs which can

[248] BT's response to 9th s26 Notice, Q1, 4 March 2013.
[249] BT's August submission (confidential), 6 August 2014, paragraph 2.17.
[250] BT's August submission (confidential), 6 August 2014, paragraphs 2.18 to 2.20.
[251] See Case CW/988/06/08 *Complaint from THUS plc and Gamma Telecom Limited against BT about alleged margin squeeze in Wholesale Calls pricing* (2013), paragraph 6.33.

be considered as SFBB-specific (e.g. the supply of routers), there are several costs categories (such as platform costs and portal fees) which are shared between SBB and SFBB. There are also some cost categories (such as customer service and some marketing costs) that are shared with voice and TV services (i.e. additional products sold by BT Consumer) and others that are shared with the rest of BT Group (specifically BT TSO costs – see Annex 2 for further details of these).

Figure 5.1: Illustration of BT Costs

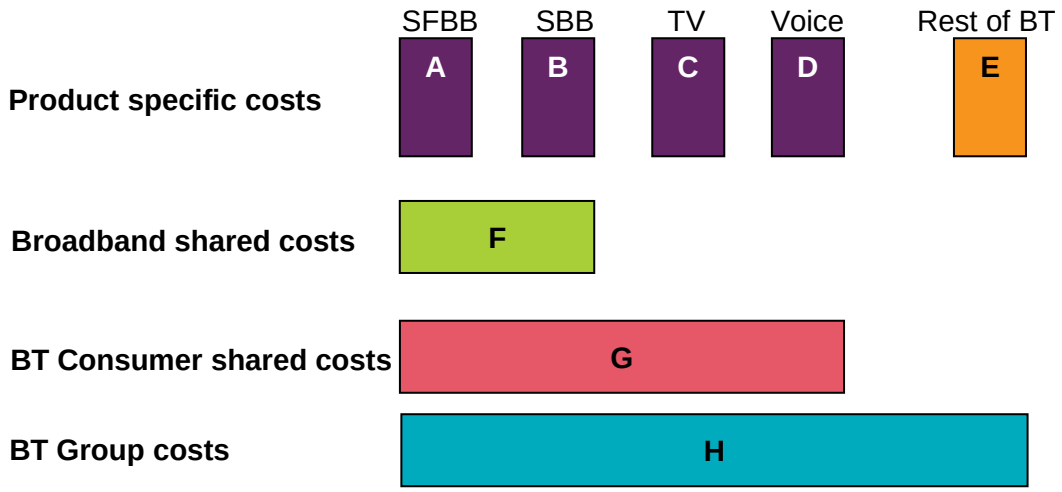

5.78 The assessment of costs would be relatively straightforward if the LRIC of the SFBB portfolio was solely represented by 'A' in the above diagram and common costs were represented by 'F', 'G' and 'H'. If that were the case, we would test whether BT's SFBB revenues were sufficient to recover 'A' and would not have to consider the extent to which shared costs were incremental to SFBB.

5.79 However, there are two key difficulties estimating LRIC in this way:

i) CPs (including BT) typically sell broadband in bundles that include voice and sometimes TV. Our margin squeeze assessment tests the prices and costs of the bundle, meaning that we include in our estimate of LRIC for the SFBB portfolio a proportion of 'C' and 'D' in Figure 5.1.

ii) Many of the shared costs in Figure 5.1 (particularly 'F' and 'G') are 'scalable' and therefore incremental. By 'scalable', we mean that they are variable in the long run with respect to the volume of customers. To take a specific example, BT's billing function supports the provision of SBB and voice only customers as well as SFBB customers. However, we consider that if BT did not supply SFBB to more than [✂] customers (as it did at the end of 2012/13),[252] there would be a reduction in billing costs. We consider this reduction in costs to be incremental to SFBB.

5.80 Including shared costs is consistent with the approach in *Telefónica*, which said the following when assessing incremental 'commercialization costs' (e.g. salaries):

> *"Telefónica claimed...that its commercial structure is a common cost shared by several services (fixed telephone, broadband internet and TV over broadband) and therefore should not be taken into account in the analysis.*
>
> *While it is true that TESAU's [Telefónica de España S.A.U. a wholly owned subsidiary] commercial structure is a common cost, it cannot be asserted that TESAU's commercial structure would have the same size (in terms of*

[252] BT's response to 9th s26 Notice, Q4 and Q16, 21 February 2014.

number of employees) if the company did not offer retail broadband services."[253]

5.81 The principle of scalability is particularly pertinent to a rapidly growing product such as SFBB, the volumes of which increased by [✂] in 2012/13 (an increase of [✂] per cent in one year) and a further [✂] in the first three quarters of 2013/14. By contrast, the number of BT voice lines and SBB customers fell during the same period.[254] This point is also consistent with *Telefónica*, where the European Commission explained their concerns that TESAU's allocation approach underestimated the cost that was incremental to retail broadband.

"A significant proportion of total commercialization costs of the company that should be allocated to the retail broadband activity is in fact allocated to the retail fixed telephony business despite the former is fast growing and the latter is mature and saturated..."[255]

5.82 It is therefore in our view reasonable to assume that a proportion of shared costs should be included in a LRIC-based assessment, particularly where the increment includes a rapidly growing product such as SFBB, where other products such as voice-only services and SBB are in decline. In the following three sub-sections, we summarise our approach to estimating the proportion of shared costs that are incremental to BT's SFBB portfolio (full details are provided in Annex 1 and Annex 2).

Broadband shared costs ('F' in Figure 5.1)

5.83 The shared costs of providing broadband include network costs, platform advertising and portal fees. We consider all of these to be 'scalable' and so have included them in our LRIC assessment. With the exception of network costs, which are estimated using granular data on unit costs and bandwidth usage (see Annex 1 for details), we have done this by requiring SFBB to make the same per subscriber contribution to shared broadband costs as SBB. A numerical example of this is provided below (this is not based on actual data but is included for illustrative purposes):

- assume Operator X incurs a cost of £10 million per year for broadband platform costs;
- Operator X has 8 million SBB subscribers and 2 million SFBB subscribers (i.e. 10 million broadband subscribers in total);
- the cost per broadband subscriber (both SBB and SFBB) is £1 per year (£10 million divided by 10 million broadband subscribers); and
- platform costs are fully scalable in the long run, meaning that Operator X incurs an incremental platform cost of £1 per year for each new broadband subscriber.

BT Consumer shared costs ('G' in Figure 5.1)

5.84 As discussed above, there are a number of costs that provide shared resources across BT Consumer, for example IT, accommodation, billing, labour and non-campaign marketing. These resources are used to support the provision of all BT

[253] Case COMP/38.784 *Wanadoo España v Telefónica* (2007), paragraphs 464 to 465.
[254] BT's response to 9th s26 Notice, Q16, 21 February 2014.
[255] Case COMP/38.784 *Wanadoo España v Telefónica* (2007), paragraph 472.

Consumer products, which are primarily telephony, broadband and TV.[256] At the end of 2012/13, BT provided [✂] individual products[257] to [✂] customers. Of these, SFBB accounted for [✂] customers ([✂] per cent of all BT Consumer customers) and [✂] products ([✂] per cent of all BT Consumer products).[258] Furthermore, as discussed in paragraph 5.81, SFBB is a fast growing product, meaning that these proportions are very likely to increase over time.

5.85 We therefore consider that the cost of the long run increment for BT's SFBB portfolio should include a proportion of the shared costs of BT Consumer, on the basis that they are scalable. As discussed in paragraphs 5.79, by 'scalable' we mean that if BT did not have a SFBB portfolio, it is likely that in the long run BT Consumer's shared costs would not be as high, for example it would require less office space, less IT equipment and would not spend as much on marketing.

5.86 As BT's accounts do not generally allow us to estimate the proportion of shared costs that are incremental, we need to make our own assessment of this. We do this through an assessment of the degree of scalability.

5.87 We consider that the vast majority of shared costs within BT Consumer are scalable in the long run (the exception is a subset of costs related to BT TSO, which is discussed in the next sub-section). We have therefore estimated long run incremental costs using a calculation based on BT's product and acquisition volumes, whereby we assess whether costs are driven primarily by the number of customers or by the number of products sold. Details of this approach are provided in Annex 2 but, in summary, we apply a specific percentage to cost items that are shared across all BT Consumer products. This percentage represents our estimate of those costs that are incremental to the SFBB portfolio. As with shared broadband costs, we require SFBB to make the same per subscriber contribution as SBB. This is consistent with cost recovery in the long run as more SBB customers migrate to SFBB.

BT Group costs ('H' in Figure 5.1)

5.88 There are also significant costs that support all BT divisions within BT Group (i.e. including BT Consumer, BT Business, BT Wholesale, BT Global Services and BT Openreach). These are principally costs related to BT TSO, which is responsible for managing BT's networks, systems, platforms and IT applications. Further details of our approach to BT TSO costs are provided in Annex 2.

5.89 BT Consumer's management accounts include a number of BT TSO-related costs. Some of these are directly incurred by SFBB and we have included them in LRIC accordingly (based on Figure 5.1 these would be included under cost A). Other BT TSO costs are shared and are generally categorised as follows:

- 'Direct' and 'Indirect' – these are costs caused either directly or indirectly by BT Consumer, and so would be included in cost 'G'; and

[256] BT Consumer also provides other services (for example devices and VoIP) but the majority of its business is driven by the three core products of telephone, broadband and TV. In Q3 2013/14, these collectively accounted for 97 per cent of BT Consumer's revenues (Source: Revised KPIs published on 25 February 2014 at http://www.btplc.com/Sharesandperformance/Quarterlyresults/Quarterlyresults.htm).
[257] Where broadband, TV and telephone are each separate products.
[258] BT's response to 9th s26 Notice, Q4 and Q16, 21 February 2014.

- 'Fixed' – these are costs that cannot be directly attributed to a specific BT division as they are mainly related to BT wide activities or in support of BT TSO activities. They include accommodation and energy and BT TSO overheads.

5.90 As the first types of cost (direct and indirect) are primarily driven by BT Consumer, we consider them to be scalable in a similar manner to costs such as IT, accommodation and labour. We therefore include a proportion of direct and indirect BT TSO costs in our assessment of LRIC for the SFBB portfolio, which is calculated using a similar approach to the one described in paragraph 5.89 (further details are provided in Annex 2).

5.91 However, we consider that the remaining fixed BT TSO costs are not scalable and are therefore not incremental to the SFBB portfolio in the long run. If BT did not have an SFBB business, it is unlikely that these costs would substantively change because it would still need to incur most of these costs to support other BT divisions.[259] This is based on our review of BT's internal accounting systems, specifically its allocation of BT TSO costs, which are recovered entirely from other BT divisions. Where possible, BT identifies the BT TSO costs that are driven, both directly and indirectly, by a specific division (e.g. BT Consumer). The remaining costs can be generally considered as non-attributable and common across BT. We therefore do not consider these to be incremental to the activities of BT Consumer or, by implication, the SFBB portfolio.

5.92 We note that BT disagreed with Ofcom's treatment of many SG&A costs within BT Consumer as fully variable to movements in SFBB volumes (see paragraph A.2.15), as well as the inclusion of more than [✂] of BT's TSO costs (see Table A2.9 below). In particular, BT claimed that customer service, billing system and accommodation costs will not be fully scalable and incremental in the linear manner that we have stated below. BT considers this to be an over-simplification.[260] However, BT did not put forward any evidence to support its position, and we therefore consider that our approach represents a reasonable means of calculating the portion of SG&A costs that are incremental to SFBB services for the purpose of this no grounds for action decision.

The wholesale products included in the test

5.93 Suppliers of retail SFBB services can use MPF or WLR in combination with a GEA product as the wholesale inputs to provide the services within the SFBB portfolio. In its complaint, TalkTalk argued that GEA FTTC in combination with MPF was the appropriate combination of wholesale inputs to use in the test as [✂].[261] In BT's response to the complaint it explained that it carries out its governance modelling on

[259] It is possible that if BT did not have a retail SFBB business some reductions in these other cost categories might occur, but we believe that the amount would be unlikely to be material given the nature of the costs concerned. We also note that some of the costs that we have included in the SFBB LRIC may not be fully scalable, but in general we expect that most of the cost categories concerned will be incremental given the considerations described in this section. Overall we believe that our approach is a reasonable basis to estimate the LRIC associated with SFBB.
[260] BT's August submission (confidential), 6 August 2014, paragraph 2.24(b).
[261] TalkTalk complaint, (confidential), 13 March 2013, page 89, paragraph 353. TalkTalk explained that it serves the vast majority of its customers using MPF as this provides the ability to better control the quality obtained by customers. It did not consider FTTP to be relevant as it is currently sold in inconsequential numbers and TalkTalk did not allege that there was a margin squeeze in place on FTTP (TalkTalk complaint (confidential), 13 March 2013, page 89, paragraph 354).

the basis of GEA FTTC in combination with WLR as these are the wholesale inputs it uses to provide retail SFBB services.[262]

5.94 In accordance with the EEO principle we have carried out the test by examining whether BT's pricing of the products in its SFBB portfolio could be replicated on the basis of the WLR-GEA combination of wholesale products.[263] A test performed using these wholesale products is a more difficult test for BT to pass than one using the MPF-GEA combination because the monthly WLR rental charge (£8.23 in February 2013) is higher than the MPF rental charge (£7.28) in the period under assessment.[264] Although there are additional costs incurred by MPF providers,[265] our assessment of BT's costs showed that additional MPF costs are more than offset by WLR-specific costs such as product unit costs for voice calls (see Annex 1 for further details).

5.95 Therefore, by carrying out the test on the basis of the wholesale product with the highest cost, our assessment will establish whether efficient operators can replicate BT's pricing of the SFBB portfolio across all possible combinations of wholesale products. As this is a more difficult test for BT to pass, it has therefore not been necessary for us to consider any other combinations of wholesale products.

Elements of the cost and revenue stacks

5.96 Having determined the appropriate cost standard (i.e. LRIC), the output increment (i.e. the SFBB portfolio of products) and the wholesale inputs (i.e. GEA in combination with WLR) for this case, we go on to identify the elements which should be included in the cost and revenue stacks.

5.97 The purpose of constructing the cost and revenue stacks is to enable us to assess whether BT has maintained sufficient margin between its upstream and downstream prices such that it covers its downstream costs. This assessment is made by comparing BT's downstream revenues with its downstream costs (which include the charges for relevant wholesale inputs).

[262] BT response (confidential), 2 April 2013, page 21, paragraph 77.
[263] We include both GEA FTTC and GEA FTTP as per BT's portfolio, though in practice the small number of customers taking FTTP makes it inconsequential to the analysis.
[264] Wholesale rental charges for both WLR and MPF change over time but throughout 2013 the annual MPF charge was lower than WLR. We note that BT increased both charges from 17 May 2014 such that the MPF charge (at £8.03) was marginally higher than the WLR charge (£8.01). However, this was primarily driven by the expiry of the WLR/LLU charge control on 31 March 2014 and the fact that the new charge control was expected to come into force three months later on 1 July 2014. BT set prices at the top-end of the ranges published in Ofcom's charge control consultation until the new charge controls came into effect. BT then rebated consumers for the difference between the charges actually set from 31 March 2014 to 1 July 2014 and the charges set by the charge controls. See http://stakeholders.ofcom.org.uk/telecoms/ga-scheme/specific-conditions-entitlement/market-power/fixed-access-market-reviews-2014/approach/. For the period from July 2014 to March 2015, the new charge control caps the WLR charge at £7.59 per month and the MPF charge at £7.18.
[265] In its complaint (confidential), 13 March 2013, pages 93 and 94, paragraph 371, TalkTalk included the costs of additional functionality of adding a voice service such as an MSAN, ports, tie cable and voice services. It also included a range of GEA costs associated with investments at the exchange such as GEA Cable link charges, Ethernet switches and power and space costs (TalkTalk complaint (confidential), 13 March 2013, page 92, paragraph 367, as supplemented by TalkTalk's response to informal information request (confidential) dated 11 April 2013, page 3 to 4).

5.98 On the basis of our analysis of TalkTalk's complaint and the information and documents provided to us by BT, we have identified the following items for inclusion in the cost and revenue stacks:

i) **Wholesale inputs** – these consist of the wholesale inputs that BT supplies both to its downstream operation and to downstream competitors. As set out above, the wholesale inputs we are including in the present case are GEA and WLR.

ii) **Downstream operating costs** – these consist of the costs incurred by BT Retail to produce and sell the final product, including the operating costs of traversing data and calls across BT's network, the costs of customer service activities, the costs associated with the various product features (e.g. BT Cloud, Wi-Fi hotspots, BT Sport) and relevant overheads.

iii) **Downstream revenues** – these consist of all the revenues BT Retail earns from supplying a customer with one of its SFBB products. This includes the revenues earned from the ongoing charges levied on subscribers, for example subscription and line rental, out of package calls, out of package data usage and advertising.

iv) **One-off / upfront costs** – these consist of the upfront costs BT Retail incurs in order to supply new subscribers with its SFBB products. These include, for example, the costs of connecting new subscribers, the costs of providing customers with the necessary equipment, the costs of sales and a share of marketing costs. We also take into account upfront revenues earned when connecting customers (such as the connection charge and charges for customer premises equipment) by subtracting this from the upfront costs.

5.99 We discuss the nature of these cost and revenue items in more detail, and our approach to modelling them for the purposes of the investigation, in Annex 1.

The method used to assess profitability

5.100 This aspect concerns the methodological approach to assessing profitability. At a high level, the two key aspects to be considered are (i) the temporal approach to measuring profitability and (ii) whether historical (actual) or forward-looking (forecast) data is used.

Temporal approach to assessing profitability

5.101 In broad terms, we consider that there are three principal approaches which could be used to measure the downstream profitability of BT's SFBB product offering:

i) **Discounted Cashflow (DCF) / Net Present Value (NPV) approach** – this approach assesses the overall profitability of a business or investment project over the life of the business or project. It can be used to assess past or forecast profitability and does not specify how costs should be recovered in distinct sub-periods (each year).

ii) **Period-by-period approach** – this approach assesses past profits using the costs and revenues of the firm as recorded in its accounts. The period-by-period approach typically uses standard accounting techniques to allocate costs (for example amortising investment expenditure over appropriate time periods) and tests whether the firm is profitable in each sub-period being assessed (e.g. each year).

iii) **Cohort analysis** – this approach considers a group of customers that take the service in one particular period, and calculates the cost of acquiring those customers (net subscriber acquisition costs). These costs are then compared to the total discounted future profits from those customers. If the resulting NPV is positive, then that cohort of customers can be regarded as profitable.

5.102 Under each of these approaches, it is necessary to identify the relevant time period for the analysis. Margin squeeze cases typically involve considering revenue and cost information over a period of time rather than for a single point in time. This is important because:

- costs and revenues for firms are dynamic and can vary over time. Therefore, for conclusions to be robust a sufficiently long period of time should be considered; and

- in the event that a margin squeeze is identified, it is important to understand the period over which the abuse has occurred.

5.103 We note that in *Telefónica*, the European Commission explained that:

> *"Both the period-by-period method and the DCF method address the same underlying issue of cost recovery over time but in different ways: The DCF approach looks at the profitability of a business over a reasonably long period (several years); it does not specify how costs should be recovered in distinct sub-periods (every year). It considers the evolution of revenues or costs of the company during the period employed for the analysis and calculates the NPV of the business. On the opposite, with the period-by-period method, standard accounting techniques result in some costs being treated as expenses and allocated only to the period in which they were incurred and other costs being capitalised and allocated to more than one time period, typically through the use of straight-line depreciation."*[266]

5.104 However, as Ofcom noted in *Freeserve*:

> *"Under certain conditions, these different measures of profitability [period by period, NPV and cohort] will give the same result; for example, where there are no changes in prices, costs or volumes over time.*[267] *When conditions are changing, each of these methods provides a different perspective on the question of profitability. However, each method requires certain assumptions to be made to inform the question of profits or losses, and the appropriateness of the method(s) chosen can depend on the assumptions required in*

[266] Case COMP/38.784 *Wanadoo España v Telefónica* (2007), paragraph 330.
[267] For a full discussion of this point see *Assessing profitability in competition policy analysis*, Economic Discussion Paper 6 July 2003 published by the OFT at: http://www.oft.gov.uk/shared_oft/reports/comp_policy/oft657.pdf

> *the specific circumstances of the investigation (e.g. whether historical data is available).*"[268]

5.105 We also note that the above approaches have been considered in the most recent UK and European margin squeeze cases, including in *BSkyB*[269] by the OFT, *THUS, Gamma*,[270] *Freeserve*[271] and *NCCN500*[272] by Ofcom and in *Wanadoo*[273] and *Telefónica*[274] by the European Commission.

5.106 In the remainder of this subsection we explain the advantages and disadvantages of each of the three methodologies, before concluding on our approach.

DCF Approach

5.107 In *THUS Gamma*, Ofcom considered the cases where the DCF approach had been used, noting that:

> "*the recent cases where NPV analysis has been used (i.e. Wanadoo, Telefónica and Freeserve) have involved nascent, fast-growing retail markets for products where the firms needed to incur significant upfront investments in new technologies or capacity. Complaints regarding the pricing of these services were typically made at an early point in the products' life cycles. In such market conditions it is conceivable that the unit costs could be expected to fall over time either through economies of scale (the upfront investments are spread over a growing number of customers) or through efficiency savings as firms benefit from learning effects or better technologies.*"[275]

5.108 The main advantage of the DCF approach is that when assessing profitability in nascent, fast-growing markets, it takes into account changes in unit costs and revenues over an appropriate period of time (e.g. economic lifetime of the assets being used). In such markets, we recognise that there may be circumstances where it might be considered reasonable for a firm to set a price that does not cover the full costs of serving early customers, but which is economically sustainable over a longer time horizon as future cost reductions materialise.[276] For example, demand

---

[268] Case CW/00613/04/03 *Investigation into BT's residential broadband pricing* (2010), paragraph 4.37. Decision available at: http://stakeholders.ofcom.org.uk/binaries/enforcement/competition-bulletins/closed-cases/all-closed-cases/cw_613/decision.pdf

[269] Case CA98/20/2002 *BSkyB investigation: alleged infringement of the Chapter II Prohibition,* (2002), paragraphs 373 to 390.

[270] Case CW/988/06/08 *Complaint from THUS plc and Gamma Telecom Limited against BT about alleged margin squeeze in Wholesale Calls pricing* (2013).

[271] Case CW/00613/04/03 *Investigation into BT's residential broadband pricing* (2010).

[272] *Complaint from Energis Communications Ltd about BT's charges for NTS call termination*, (2008), available at http://stakeholders.ofcom.org.uk/enforcement/competition-bulletins/closed-cases/all-closed-cases/cw_823/

[273] Case COMP/38.233 *Wanadoo Interactive* (2003).

[274] Case COMP/38.784 *Wanadoo España v Telefónica* (2007).

[275] Case CW/988/06/08 *Complaint from THUS plc and Gamma Telecom Limited against BT about alleged margin squeeze in Wholesale Calls pricing* (2013), paragraph 6.125.

[276] Note that this assumes that the cost savings are not matched by reductions in the competitive price of the product.

conditions for the nascent, fast growing product may be such that a price that covers the full costs for providing it to early adopters would result in demand being choked off and, therefore, the product failing.

5.109 However, we consider that, even in such circumstances, the inherent shortcomings of the DCF approach need to be factored in to the decision of how to measure profitability. The three principal shortcomings (outlined in *Telefónica*)[277] are:

i) In order to implement a DCF analysis, a number of assumptions and forecasts need to be made such as volume forecasts, cost-volume relationships and asset terminal values. The primary source of assumptions and forecasts is likely to be the dominant firm being investigated. As a result, the outcome of the test risks relying on unreasonable forecasts of the dominant firm, thus potentially leading to a skewed result.

ii) Even if a DCF analysis shows a positive NPV, it does not tell you whether positive margins are due to legitimate pricing or the exclusion of competitors.

iii) A DCF method allows the dominant undertaking to incur substantial initial losses (that would be compensated in the future), which its competitors may not be able to absorb.

5.110 Our view is that, where possible, it is preferable to use historical data in favour of making judgments on various assumptions and forecasts. This is particularly in light of the difficulty in distinguishing between cases where the positive NPV is due to legitimate pricing and situations in which the only reason for the profits is the exclusion of competitors.

5.111 We also note that (other than the costs of BT Sport which we deal with separately below) the majority of the costs are concerned with the provision of retail services (e.g. customer service) and are for the most part identical to that used to supply SBB services, the principal difference being the wholesale inputs purchased.[278] To illustrate, [✂] of SFBB ongoing operating costs are also items in the SBB cost stack (see Annex 1 for a full assessment of costs). We also note that many of BT's SFBB customers previously purchased SBB from BT, such that the increase in BT's overall retail base is lower than the growth of SFBB customers. This implies that the current level of costs associated with BT's retail broadband business as a whole is likely to be representative.

5.112 Given these considerations, we have not carried out a DCF analysis and instead have considered whether the period-by-period or cohort approach will allow us to draw valid conclusions in the present case.[279]

Period-by-period approach

5.113 In *Telefónica,* the European Commission noted that the period-by-period approach had been the principal approach adopted in cases involving price abuses:

[277] Case COMP/38.784 *Wanadoo España v Telefónica* (2007), paragraphs 333 to 335.
[278] SFBB requires the purchase of GEA in addition to MPF or WLR.
[279] If the market is in a stable position, then a DCF approach would yield an identical result to a period-by-period analysis, such that there is no advantage to a DCF approach.

> *"The practice of the European Court of Justice and of the European Commission in cases involving price abuses (in particular predatory pricing, margin squeeze) has always been to assess the profitability of the dominant undertaking using the "period by period" approach."*[280]

5.114 Such an approach would also be consistent with previous Ofcom cases (for example *THUS Gamma*). The main advantages of a period-by-period approach are the counterpoints to the disadvantages of the DCF approach discussed at paragraph 5.109, namely that:

- it is based on actual data and so the reliance on forecasts and assumptions is limited (though not eliminated, for example amortising investment expenditure requires an estimate of the average customer lifetime); and
- it shows whether or not the incumbent's downstream operations have been profitable in the short-run (e.g. year on year).

5.115 However, there are two main disadvantages of the period-by-period approach. The first difficulty in applying a period-by-period approach in this case is that BT does not currently produce separate management accounts for SFBB and SBB. Furthermore, BT's retail SFBB business is relatively new and volumes were small compared to SBB until the start of 2012 (around [✂] at the end of 2010/11 – accounting for [✂] per cent of BT's broadband customers – and [✂] at the end of 2011/12, accounting for around [✂] per cent of its broadband base).[281] It is therefore not possible to estimate BT's historic SFBB costs and revenues during the past three financial years (2010/11 – 2012/13) using BT's accounting data.

5.116 Second, with a relatively new product such as SFBB, many of an EEO's costs are likely to consist of subscriber acquisition costs. Even though these are amortised over the average customer lifetime in a period-by-period approach, there is the potential for accounting distortions that may show that the business is unprofitable in the initial period when a large number of new customers are being acquired, although the customers could be profitable over their average lifetime. Such distortions can result from the use of depreciation and amortisation techniques, which can vary significantly.

5.117 Given these issues, we have taken the view that the period-by-period approach may not provide an accurate reflection of the profitability of BT's SFBB offers for the purposes of our analysis. We therefore go on to consider the cohort approach below.

Cohort approach

5.118 The main advantages of the cohort approach are that:

- it is possible to carry out using BT's historic financial data, and so does not rely on forecasts;
- it assesses profitability over the expected average customer lifetime; and
- it considers new customers and so is representative of the prices against which an EEO would compete to acquire new customers.

[280] Case COMP/38.784 *Wanadoo España v Telefónica* (2007), paragraph 331.
[281] BT's response to 5th s26 Notice, Q18, 10 September 2013.

5.119 On the first point, we have used BT Consumer's management accounts and a number of BT's financial and management information systems (along with product volume data) to estimate relevant revenues and costs on a per subscriber basis.[282] This allows us to build a 'bottom-up' assessment of profitability, as opposed to an aggregate 'top-down' historic assessment that is used in the period-by-period approach. Furthermore, our assessment uses actual data for 2012/13 wherever possible, meaning that we do not need to rely on a large number of assumptions or forecasts (an important exception to this is in relation to BT Sport, which is discussed in Section 6). Annex 1 provides a detailed explanation of our calculations.

5.120 On the second point, by looking at profitability over the expected average customer lifetime the cohort approach indicates whether BT's competitors can profitably match BT's offers, even if subscriber acquisition costs are not recovered in the period in which the customer is acquired.

5.121 In terms of the focus on new customers, we consider this to be important for three reasons. First, we consider it likely that BT's prices to new customers are of primary importance to the evolution of competition, especially in the period of market transition from SBB to SFBB. While BT's existing SFBB customers are one possible source of business for rivals, most competition will be with BT's prices to new customers. At the end of BT's 2012/13 financial year, [✂] per cent of BT's SFBB customers were added in the previous 18 months,[283] meaning they were locked into an existing contract.

5.122 The cohort approach also allows us directly to test the sustainability of BT's current pricing. As more customers sign up to the newer offers, they will become more prevalent (and therefore more important) over time. A cohort approach indicates whether or not such pricing is profitable before the full effects of an anti-competitive margin squeeze are apparent.

5.123 Lastly, we consider that an ability by BT to raise prices to existing customers while maintaining lower prices to new customers may raise concerns in a context where BT obtains a large first mover advantage in establishing a captive customer base, especially if any first mover advantage is associated with a margin squeeze.

5.124 We therefore consider that it is appropriate to adopt a cohort approach in this case.

Application of the cohort approach

5.125 In applying the cohort approach we assume that BT's monthly margins (i.e. both revenues and costs) stay constant over time. By not factoring in price increases during the average customer lifetime, we ensure that the analysis does not build in the potential anti-competitive effects of pricing below cost for an initial period.

5.126 We have adopted a cohort approach which recognises that broadband supply is characterised by firms incurring substantial up-front subscriber acquisition costs (for example connection costs, a router and marketing to attract subscribers) which are

[282] We estimate the cost of providing SFBB to the relevant cohort based on the average LRIC for all of BT's SFBB customers. Although many of the costs of serving a specific cohort will be common to other cohorts, our test does not treat an individual cohort as an increment - rather it is used to represent BT's new SFBB customers.
[283] BT's response to 9th s26 Notice, Q4, 21 February 2014.

recovered over the average customer lifetime.[284] We calculate expected average customer lifetime using BT's historic churn data for copper broadband. Further details are provided in Annex 1.

5.127 We note our methodology for assessing profitability is consistent with the approach that TalkTalk applied in its complaint as well as the approach that BT takes in its Model, which it uses to provide internal assurance on compliance.[285]

5.128 We also note that a cohort approach was adopted in *Wanadoo*:

> *"...This method supposes that the firm seeks to secure a return on its investment within a reasonable time, rather than to recover all its costs at once. It may be that its prices will not fully cover its costs in the first few years of business, without driving off the market competitors with less financial stamina who are likewise investing with a view to reasonable profitability.*
>
> *To assess the economic equilibrium of Wanadoo Interactive's ADSL services, the Commission has spread the costs of acquiring customers over 48 months. A subscription to the eXtense service ties the customer for a year at least. But to spread the acquisition costs over just one year would not reflect ordinary market conditions, since on average subscribers stay with the same service provider for longer than that."*[286]

5.129 The cohort method we apply uses historical data where possible and estimates the payback period of a specific cohort of customers (we explain the relevant cohorts in paragraphs 5.133 to 5.138). We describe the approach below, referring to:

A = Ongoing weighted monthly revenue;

B = Ongoing weighted monthly wholesale costs;

C = Ongoing weighted monthly retail costs;

D = Upfront weighted subscriber acquisition revenues; and

E = Upfront weighted subscriber acquisition costs.

5.130 Note that the ongoing monthly wholesale costs (B) reflect the wholesale prices that BT charges for VULA and WLR.

---

[284] A similar approach is used in the period-by-period approach, where investment costs (for example acquisition-related costs such as marketing) are generally amortised over the average customer lifetime.

[285] We note that TalkTalk referred to its profitability assessment as being based on a discounted cash flow approach (TalkTalk complaint (confidential), 13 March 2013, page 98, paragraph 384) and that BT explained that its Model used a DCF approach (BT's response to 2nd s26 Notice, Q1, 12 June 2013). However, we consider that both TalkTalk and BT's approaches were in fact more similar to what we describe as a cohort approach. In particular, TalkTalk and BT did not seek to test the profitability of SFBB as a whole since its launch, but rather assessed the profitability of certain offers or portfolio of offers available to a specific group of customers at a particular time.

[286] Case COMP/38.233 *Wanadoo Interactive* (2003), paragraphs 76 to 77.

5.131 The test is whether the cumulative ongoing monthly margin (A-(B+C)) covers net subscriber acquisition cost (E-D) within the expected average customer lifetime of [✂] years (see Annex 1). The ongoing monthly margin is discounted at the Rest of BT nominal cost of capital (see Annex 1 for further discussion). If there is a positive NPV over the expected average customer lifetime then the test will be passed. Figure 5.2 shows an illustrative example of how the customer lifetime approach works.

Figure 5.2: Customer lifetime test example

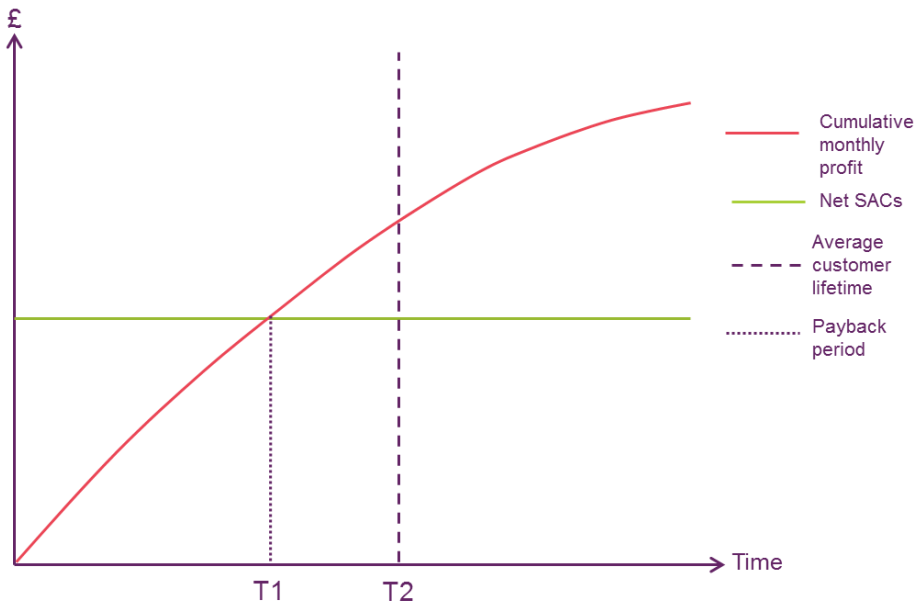

5.132 In the figure above, net subscriber acquisition costs (net SACs) are represented by the green line. The value of these costs is not time dependent as it is assumed SACs are fully incurred at the time when a subscriber is acquired. The cumulative monthly profit is the sum of the ongoing monthly margins earned over time. It is represented by the red line and its slope reflects the discount rate which has been applied to it. In this example, the payback period, the time at which cumulative monthly profit equals net SACs, is shown at T1. The average customer lifetime is shown as T2. In this diagram the payback period is less than the average customer lifetime, so the margin squeeze test is passed. If the payback period were longer than the average customer lifetime the test would be failed.

5.133 In terms of the cohorts that we consider in our assessment, we look at BT's portfolio of SFBB propositions in three different periods:

- 1 February 2013 – 8 May 2013 (the February 2013 offer) – this formed the basis of TalkTalk's original complaint;
- 9 May 2013 – 3 January 2013 (the May 2013 offer) – this represents the period from which BT started to offer BT Sport at no additional charge to its broadband subscribers; and
- 4 January 2014 – 31 January 2014 (the January 2014 offer) – BT increased some of its prices from 4 January 2014.

5.134 Therefore, the cohorts we consider in our analysis are those customers acquired in these specific time periods. We assess costs and revenues of each BT SFBB

product (e.g. Infinity 1, Infinity 2, Infinity 2 with TV, Plusnet etc) and weight them based on the respective number of acquisitions.

5.135 We note that BT's retail SFBB propositions can (and do) change on a regular basis. We divide our analysis based on the time periods above because they represent significant and material changes in BT's overall offer (the BT Sport offer in May 2013 and a set of price increases in January 2014), such that the results of our analysis change substantially. This is not the case in relation to price or product changes within the periods defined above.

5.136 In applying a cohort approach, we generally assume that the monthly margin that BT earns for each cohort (or each customer within a cohort) stays constant over time (i.e. there are no changes to revenues or costs).[287] Our cost assessment has not identified any cost items that are likely materially to fall (or increase) over time. We also note that if there were material changes in cost in the future, BT could revise its pricing to reflect these changes.

5.137 BT has claimed that the assumption adopted in this cohort approach that revenues and unit costs remain constant is conservative and not in line with recent commercial trends for annual or biannual price increases (e.g. including by TalkTalk and Virgin Media). BT considers that including future price rises would be appropriate in the cohort approach.[288]

5.138 We do not consider it appropriate to assume that BT's monthly margins will increase in the future. We note that this would risk a situation where no margin squeeze is found only because the test applied builds in the rewards of anti-competitive behaviour (i.e. margins are able to increase as a result of competitors being weakened). Moreover, although the costs and revenues incurred by a particular customer cohort are likely to change over time, it is difficult to forecast such changes and it is not clear what the net effect will be (for example increases in broadband prices may be balanced out by potential reductions in call revenues). We consider our proposed approach is therefore appropriate as a means of estimating costs and revenues.

Summary of our approach to testing for a margin squeeze in this case

5.139 In the sub-sections above we have explained why, in this case, our approach to testing for a margin squeeze:

- is on the basis of the EEO test with no adjustments;
- is based on the use of the LRIC cost standard;
- adopts the SFBB portfolio as the relevant output increment;
- includes an attribution of shared costs to SFBB;
- assumes that the relevant wholesale products are GEA in combination with WLR;

[287] [✂]. An explanation of this is provided in Annex 1. Our approach to assessing BT Sport costs and revenues is covered separately in Section 6 and Annex 3.
[288] BT's August submission (confidential), 6 August 2014, paragraphs 2.29 to 2.30.

- assesses costs and revenues on the basis of wholesale inputs, downstream operating costs, downstream revenues and one-off / upfront costs; and

- applies a cohort approach based on new customers only based on the February 2013 offer, the May 2013 offer and the January 2014 offer.

5.140 Following BT's decision to offer BT Sport to its broadband subscribers at no additional charge, we have also included this in our margin squeeze assessment, by applying what we call a net cost approach. We consider this in Section 6.

Section 6

Approach to BT Sport

Introduction

6.1 On 9 May 2013, BT announced the launch of its BT Sport channels. BT has invested over £[✂][289] in acquiring content distribution rights for sport and has commercialised these rights by offering five TV channels, BT Sport 1, BT Sport 2, BT Sport 1 HD, BT Sport 2 HD, and ESPN.

6.2 The TalkTalk supplementary submission asked Ofcom to consider the costs of providing BT Sport as part of its investigation. TalkTalk noted that despite BT spending significant sums on sports rights,[290] BT's strategy of offering BT Sport for free to BT broadband customers "*appears to be to not cover a substantial part of its costs*."[291]

6.3 TalkTalk asserted that BT had a strategy of giving free access to BT Sport on a BT set-top box to SFBB customers only, and that this strategy, combined with BT's public announcements about the offer, indicated that BT planned to use BT Sport to drive SFBB take-up.[292] In the TalkTalk September submission, TalkTalk argued that BT's statements and actions demonstrated that BT Sport was primarily intended to increase BT's broadband share, particularly for SFBB, rather than developing a standalone sports broadcast business.[293] TalkTalk reiterated its view that all of the costs of BT Sport should be recovered from the broadband packages that include BT Sport.[294]

6.4 In the BT supplementary response, BT stated that it would not be appropriate for Ofcom to include BT Sport in the context of the current investigation.[295] In this regard, BT asserted that its downstream product offer was "*substantially differentiated from that of* TTG [TalkTalk] *(and other retail competitors).*"[296] BT argued that assessing premium sport content in BT's broadband bundles as part of the investigation would be inconsistent with the "*standard margin squeeze paradigm in which the downstream products are broadly homogenous*"[297] and would "*introduce highly novel and untested concepts into the proper framework of analysis of an alleged margin squeeze.*"[298]

---

[289] BT's response to 5th s26 Notice, Q27 and Q28, 23 August 2013.
[290] TalkTalk supplementary submission (confidential), 21 May 2013, page 4, paragraph 16.
[291] TalkTalk supplementary submission (confidential), 21 May 2013, page 8, paragraph 31.
[292] TalkTalk supplementary submission (confidential), 21 May 2013, pages 8 and 24, paragraphs 33 to 34 and 116 (referencing BT Press Release, "*BT Sport free for Millions of Homes*", 9 May 2013; "*BT boss: 'We want to bring sports back to fans'*", The Telegraph, 11 May 2013 http://www.telegraph.co.uk/finance/newsbysector/mediatechnologyandtelecoms/10051240/BT-Sport-BT-boss-wants-to-bring-sports-back-to-fans.html)
[293] TalkTalk letter to Ofcom dated 10 September 2013 on the appropriate treatment of BT Sport costs.
[294] TalkTalk wrote to Ofcom on 22 November 2013 following BT's announcement that it had acquired the rights to broadcast the UEFA Champions League to set out further views on BT's sport strategy.
[295] BT supplementary response, 10 June 2013, page 1.
[296] BT supplementary response, 10 June 2013, page 1.
[297] BT supplementary response, 10 June 2013, page 1.
[298] BT supplementary response, 10 June 2013, page 3.

6.5 In BT's November submission, BT stated that TalkTalk's analysis represented a "*crude over-simplification of the investments BT has made in sports content in order to generate value over the longer term,*"[299] because its approach to treating the cost of BT Sport as a cost of providing SFBB took a short-run and static view, which would fail to take account of BT's longer-term objectives.[300] BT also argued that as TalkTalk's supplementary submission diverges from the standard "*plain vanilla*" margin squeeze test, any concerns arising "*on the numbers*" would not be sufficient by itself to establish an abuse and would need to be accompanied by a detailed assessment of likely foreclosure from defined downstream markets.[301]

6.6 In BT's August submission, BT reiterated its contention that BT Sport costs should not be included in the current margin squeeze analysis, arguing that it is incorrect to incorporate the costs of BT Sport in a balanced test of profit sacrifice or effects of BT Infinity products. BT stated that BT Sport costs were included in the screening test in BT's November submission only in order to provide additional reassurance to Ofcom that it was not necessary to investigate further TalkTalk's complaint.[302]

6.7 In light of the various submissions from TalkTalk and BT and other relevant evidence before us, we have considered the relevance of BT Sport to this investigation. [303] In this regard we note that BT offers BT Sport at no additional charge to subscribers to its SBB and SFBB services.[304] These BT broadband subscribers can access BT Sport via an app, online, over the Sky TV platform, or with BT TV if they also subscribe to BT's TV services.[305] We consider that a competitor would therefore have to make an offer of comparable value to compete with BT. This means that, in this case, we consider it appropriate to include the costs of providing BT Sport to BT's SFBB customers in our margin assessment.

6.8 In our assessment, we adopt a 'net costs' approach to evaluating the costs of offering BT Sport to its broadband customers. This is similar to the approach adopted by TalkTalk in its complaint, and by BT in its 'screening test'. By 'net costs' we mean the total costs of BT Sport (e.g. in respect of content and production costs) having subtracted direct revenues from BT Sport (e.g. wholesale deals with Virgin Media and Setanta in Ireland, sales to commercial customers ('pubs and clubs'), sales to residential customers on the Sky platform, and channel advertising revenues). We then consider the proportion of the net costs to be recovered from the SFBB portfolio.

---

[299] BT's November submission (confidential), 22 November 2013, page 27, paragraph 5.7.
[300] BT's November submission (confidential), 22 November 2013, page 40, paragraphs 7.7.
[301] BT's November submission (confidential), 22 November 2013, page 39, paragraph 7.1.
[302] BT's August submission (confidential), 6 August 2014, paragraph 2.7(a).
[303] On 18 June 2013, Ofcom notified the parties that it considered that these matters should properly be considered as part of the investigation.
[304] BT charges its broadband subscribers for access to BT Sport in High Definition. BT Sport in Standard Definition is available for free for BT broadband customers that have more than 12 months remaining on their existing contract or that agree to sign a new contract with BT for a minimum of 12 months. In some instances the requirement to re-contract BT broadband in order to get BT Sport in SD for free has been waived, in particular, for customers that subscribed to BT SFBB and BT TV between 10 May 2014 and 1 August 2014. BT's response to 6th s26 Notice, Q22, 10 July 2013.
[305] Until 25 January 2014, BT Sport was available both to BT's YouView customers via Multicast (which requires BT's Infinity services) and to BT's Vision customers via DTT, if they did not take BT's Infinity services. From 25 January 2014, BT Sport was no longer available to new BT Sport subscribers via DTT, i.e. those customers that are not able to or do not take BT's SFBB services. In BT's August submission, BT noted that since May 2014, new and existing BT SBB customers can get access to standard definition versions of BT Sport 1, BT Sport 2 and ESPN on BT TV using the multicast over copper (MOCO) capability.

6.9 In this section we set out the reasons for our approach, and how we have implemented it, as follows:

- first, we set out some evidence about BT's strategy in relation to BT Sport, which shows that an important driver of BT's investment in BT Sport and strategy for distribution has been to support the broadband business, and that BT Sport may have been intended to support BT's SFBB business in particular;
- second, we explain why we consider the net costs approach to be an appropriate basis for calculating the costs of offering BT Sport to BT's broadband subscribers;
- third, we explain how we have calculated the BT Sport net costs in this case; and
- fourth, we explain how we have approached the recovery of the net costs of BT Sport in this case.

6.10 We also set out BT's and TalkTalk's views, where relevant, on the treatment of BT Sport in the context of this investigation.

BT's strategy in relation to BT Sport

6.11 The costs involved in providing BT Sport comprise the costs of acquiring the distribution rights to various sporting events, the costs of production to turn these rights into programmes and channels, and the costs of distribution to subscribers. These costs can, in principle, be recovered by selling subscriptions at the retail and wholesale level, to both residential and commercial customers, and from advertising. These means of monetising the value of the channels would potentially be available to any successful bidder for similar sport rights, although it is possible that certain bidders may have advantages over others in respect of some of the distribution channels, if for instance they have access to a relatively large established customer base on a particular distribution platform.

6.12 In this section we review the evidence about BT's strategy in relation to BT Sport. We first consider the evidence suggesting that BT has developed BT Sport in significant part because it supports BT's broadband business, considering both BT's strategy for its investment in sports rights, and its strategy for the distribution of BT Sport. We then consider the evidence that BT Sport was developed to support BT's SFBB business in particular.

BT's investment in sports rights was linked to BT's broadband business

6.13 In BT's November submission, BT set out the commercial and strategic objectives underpinning its investment in BT Sport. BT stated that [✂] and that.[306] [✂].[307] [✂].

[306] BT's November submission (confidential), 22 November 2013, page 29, paragraph 6.6.
[307] BT's November submission (confidential), 22 November 2013, page 31, paragraph 6.11. See also BT's response to 4th s26 Notice, Q4 and Q5, 22 July 2013 - Annex 4.03 c, slide 4, 31 May 2012.

6.14 BT's commercial rationale is also shown in its internal documents prior to the FAPL auction. In May 2012, an internal presentation showed that BT considered that [✂].[308] BT states that [✂].[309] This presentation predicted that the BT Sport proposition would [✂].[310] BT considered [✂].[311]

BT strategy for distribution of BT Sport is linked to BT's broadband business

6.15 In the 2012 FAPL auction, BT won the rights to 38 FAPL games. [✂].[312]

6.16 After the FAPL auction, BT decided to offer BT Sport for free to its broadband subscribers,[313] [✂]. BT noted in its internal documents that [✂].[314] Similarly, a subsequent presentation by BT to its Executive Steering Group (ESG) which sought approval for the recommended free pricing model for BT Sport shortly before the announcement in May 2013 referred to the commercial objectives and rationale of the pricing model as creating further incentives for customers to switch to BT broadband and driving broadband acquisition. [315] It stated that BT Sport will [✂].[316]

6.17 Pricing BT Sport in this way would mean that BT would obtain lower direct revenues from BT Sport [✂]. However as BT explained in its submission, BT's aim remained to use BT Sport to obtain incremental broadband customers:

> *"As before, BT considered that BTS [BT Sport] could be used to improve broadband customer growth and retention, [✂].*

[308] BT's response to 4th s26 Notice, Q4 and Q5, 22 July 2013 - Annex 4.03 c, slide 12, 31 May 2012.
[309] BT's response to 4th s26 Notice, Q4 and Q5, 22 July 2013 - Annex 4.03 c, slide 3, 31 May 2012.
[310] BT's response to 4th s26 Notice, Q4 and Q5, 22 July 2013 - Annex 4.03 c, slide 5, 31 May 2012.
[311] BT's response to 4th s26 Notice, Q4 and Q5, 22 July 2013 - Annex 4.03 c, slide 5, 31 May 2012.
[312] BT's November submission (confidential), 22 November 2013, page 30, paragraph 6.7 and page 32, paragraph 6.15.
[313] BT's response to 4th s26 Notice, Q4 and Q5, 22 July 2013 – Annex 1A.07, slide 4, 26 July 2012.
[314] BT's response to 4th s26 Notice, Q4 and Q5, 22 July 2013 – Annex 1A.02, slide 7, 21 June 2012.
[315] BT's response to 4th s26 Notice, Q4 and Q5, 22 July 2013 – Annex 9B.3, slide 4, 6 February 2013. [✂].

[316] BT's response to 4th s26 Notice, Q4 and Q5, 22 July 2013 – Annex 9B.3, slide 4, 6 February 2013.

> *BT's pricing strategy rested upon the greater value contribution per customer offering BTS [BT Sport] for free as a means of retaining and acquiring new BT broadband customers."*[317]

6.18 Similarly, in an interview on BBC One - Breakfast after the launch of BT Sport, Gavin Patterson, BT's CEO, was asked "*You are going to be offering Premier League football matches for free. How can you afford to do that?*" Mr Patterson explained that:

> *"[I]t's all about broadband. Our objective is really to get broadband into as many people's homes around the country as we possibly can. We know that sports is something that a significant chunk of the population are interested in, and we want to use sport as a way in."*[318]

6.19 In choosing to offer BT Sport to all its broadband subscribers at no additional charge, BT receives lower revenue that it could otherwise make from selling direct channel subscriptions to the proportion of its broadband customers that would have been willing to pay a subscription fee for this service but are instead receiving it for free with their BT broadband package. BT anticipated that the revenue sources available from distributing BT Sport for a lower fee to BT broadband customers than to non-BT broadband customers would be [✂].[319]

6.20 BT explained that it considers that this reduction in direct revenues is more than compensated by the additional margins it will earn on incremental broadband customers that it wins or retains as a result of offering BT Sport. BT stated in its November submission that, when it takes into account its margin on retail broadband, providing BT Sport for free to its broadband customers [✂].[320]

6.21 In addition, BT Sport is available through a limited number of distribution channels. Previous entrants in premium sports channel provision, such as Setanta and ESPN, made their channels available across a number of distribution platforms to subscribers who were willing to pay the fee. By contrast, BT Sport is available on a limited number of distribution platforms. For example, BT Sport is not currently available to TalkTalk YouView customers.

6.22 We consider that this reflects BT's strategy of using BT Sport to encourage take-up of its broadband products. For example, [✂]:

---

[317] BT's November submission (confidential), 22 November 2013, page 34, paragraphs 6.21 to 6.22. When comparing various distribution strategies following the FAPL auction results, BT noted the value of BT Sport as a tool to retain and attract customers to its telephony, broadband and pay TV businesses and secure direct billing relationships with those viewers (BT's November submission (confidential), 22 November 2013, page 35, paragraph 6.23).

[318] Transcript taken from broadcast on 10 May 2013, televised on UK national television (BBC One – Breakfast), see http://www.youtube.com/watch?v=gy-YPI6NAko

[319] BT's response to 4th s26 Notice, Q4 and Q5, 22 July 2013 - Annex 1A.02, slide 6, 21 June 2012.

[320] BT's November submission (confidential), 22 November 2013, page 34, paragraph 6.22 and BT's response to 4th s26 Notice, Q4 and Q5, 22 July 2013 - Annex 1A.02, slide 5, 21st June 2012.

[✂][321]

6.23 BT's distribution strategy means that it receives lower direct revenue than it could have made by selling BT Sport to TalkTalk TV customers and other YouView viewers who do not subscribe to BT's TV and broadband proposition.

6.24 It is also possible that BT's decision to self-retail to Sky customers (for free if such customers take BT's broadband services, or for a monthly fee of £12 if they do not take BT broadband) rather than also wholesale BT Sport to Sky, may have also been driven by BT's aim to establish direct billing relationships with these customers and encourage them to take its broadband services. In considering its strategy in TV and content in January 2013, BT explained that:

[✂] [322]

6.25 We consider that BT's distribution strategy for BT Sport provides further confirmation that a key driver of BT's sports venture is to support the broadband business.

BT Sport may have been developed to support BT's SFBB business in particular

6.26 BT's internal documents prepared before the FAPL auction suggest that BT's investment in BT Sport may have been connected to its fibre roll-out in particular.

6.27 In a presentation to BT's Executive Steering Group (ESG), dated 23 May 2012, BT noted that [✂].[323]

6.28 [✂].[324] It stated that [✂].[325] It expected that BT Sport [✂].[326] BT also said that the BT Sport investment was [✂].[327] The same internal document also showed that [✂].[328]

[321] [✂].
[322] BT's response to 4th s26 Notice, Q4 and Q5, 22 July 2013 - Annex 4.03 d, Slide 23, TV and Content Update, January 2013.
[323] BT's response to 4th s26 Notice, Q4 and Q5, 22 July 2013 - Annex 1A.01, Slide 14, 23 May 2012.
[324] BT's response to 4th s26 Notice, Q4 and Q5, 22 July 2013 - Annex 4.03 c, Slide 12, 31 May 2012.
[325] BT's response to 4th s26 Notice, Q4 and Q5, 22 July 2013 - Annex 4.03 c, Slide 3, 31 May 2012.
[326] BT's response to 4th s26 Notice, Q4 and Q5, 22 July 2013 - Annex 4.03 c, Slide 5, 31 May 2012.
[327] BT's response to 4th s26 Notice, Q4 and Q5, 22 July 2013 - Annex 4.03 c, Slide 10, 31 May 2012.
[328] BT's response to 4th s26 Notice, Q4 and Q5, 22 July 2013 - Annex 4.03 c, Slide 4, 31 May 2012.

6.29 Some of BT's documents from after it won the FAPL rights also suggest that SFBB remained an important consideration for BT. In BT's press release announcing the pricing of BT Sport, Ian Livingstone (BT's then CEO) stated:

> *"BT Sport will complement our world class fibre network. Customers don't have to take BT Infinity to get BT Sport but we are encouraging them to move onto fibre broadband so they can enjoy the best of both worlds."*[329]

6.30 When considering its revised pricing for BT Sport given the outcome of the FAPL auction, BT [✂].[330] BT decided to provide BT Sport channels at a discount to its SBB customers as well. [✂].[331]

6.31 In BT Sport's business case forecasts, BT estimated the SFBB/SBB split of the incremental broadband customers which it anticipated to gain as a direct result of the BT Sport offer. These projected that SFBB would account for [✂] of these incremental customers. Based on BT's internal estimates at the launch of the channels, BT expected BT Sport to deliver over [✂] incremental broadband customers by the end of 2015/16, [✂] of which would be on SFBB.[332]

6.32 In addition, BT's internal forecasts predicted that the future net growth in its broadband base [✂].[333]

6.33 [✂] the way BT Sport is distributed over the BT TV platform are also consistent with a strategy of using BT Sport to encourage SFBB take-up. In BT's internal guides to its customer service agents, BT advises its customer service staff [✂].[334] In January 2014, BT announced that only those new BT TV customers that took SFBB would be able to watch BT Sport on their television.[335]

6.34 The current take-up of BT Sport is also consistent with a strategy by BT to use BT Sport to promote SFBB. The actual volumes of BT Sport show that BT's SFBB customers were more likely to sign up to BT Sport for free than BT's SBB customers.

---

[329] BT Press Release, "*BT Sport free for millions of homes*," 9 May 2013, http://www.btplc.com/news/articles/showarticle.cfm?articleid=%7B3c92e33b-6f97-420c-a5e2-3cdbc4d95929%7D

[330] BT's response to 4th s26 Notice, Q4 and Q5, 22 July 2013 - Annex 1A.02, Slides 6 and 8, 21 June 2012.

[331] BT's August submission (confidential), 6 August 2014, Annex, item 14.

[332] BT's response to 6th s26 Notice, Q21, Q24 and Q25, 28 October 2013.

[333] BT's response to 5th s26 Notice, Q14, 10 September 2013.

[334] In BT's response to 4th s26 Notice, Q3, 10 July 2013, BT submitted a copy of BT Sport desk drop sheet for the Inbound Acquisition Teams, entitled [✂] Similarly, BT submitted a copy of Sales Best Practice inbound call guide V2, in which customer service is advised to [✂].

[335] SBB customers who obtain BT Sport via the Sky platform would still be able to receive BT Sport on their TV. In addition, since May 2014, SBB customers would be able to access BT Sport on BT TV via MOCO.

As at the end of December 2013, [✂] per cent of BT's SFBB customers have subscribed to BT Sport, compared to [✂] per cent of BT's SBB customers.[336]

Why we use the net cost approach in this case

6.35 As set out at paragraphs 6.15 to 6.25, we consider that a key reason for BT's investment in sports distribution rights, and a key reason for its strategy for the distribution of BT Sport is to support its broadband business.

6.36 Consequently, we consider that if BT did not expect returns from the margin on incremental or retained broadband subscribers, it is likely either that BT would not have incurred the same investment costs, or that it would have adopted different approaches to distributing the channel. Accordingly, we consider that part of the costs of BT Sport should be considered as part of BT's costs of serving its broadband customers.

6.37 In this case, we consider that the best approximation of the costs of BT Sport to the broadband business is the part of the total BT Sport costs that is not recovered from other revenue sources. We refer to these as the 'net costs' of BT Sport. We calculate the net costs as the total costs of BT Sport *minus* the direct BT Sport revenues from other sources.

6.38 We note that our net costs method is similar to the approach adopted by TalkTalk in its supplementary submission, in which TalkTalk deducted its estimate of BT's direct revenues from Sky customers from its estimate of the gross costs of BT Sport.[337] We also note that BT adopted a similar approach to our net costs method in its November submission (although we also note that BT referred to this as a "*screening test*" and did not accept that this screening test was the correct approach overall).[338] In its screening test, BT treated the costs of BT Sport not recovered from direct revenue sources, "*as essentially an expense related to the acquisition and retention of all broadband customers*."[339]

6.39 The net costs methodology that we have adopted reflects the fact that a certain proportion of the total costs of BT Sport are recovered by BT from sales other than to its broadband customers. It implicitly assumes that the margin from its broadband customers should be sufficient to cover the remaining costs after other sales have been taken into account.

6.40 As explained in paragraph 5.21, we have carried out an assessment of BT's margins in SFBB by applying the EEO test, i.e. by using BT's downstream costs. We consider that the net costs approach is consistent with an EEO test because an EEO that wished to make an offer of comparable value to its broadband customers would have to incur costs similar to the net costs of BT Sport.

[336] BT's response to 9th s26 Notice, Q19, 18 February 2014.
[337] TalkTalk supplementary submission (confidential), 21 May 2013, page 15, paragraph 66.
[338] BT's November submission (confidential), 22 November 2013, page 6, paragraph 1.24.
[339] BT's November submission (confidential), 22 November 2013, page 44, paragraph 7.22.

How we calculate the net costs attributable to broadband in this case

6.41 In the following subsections we explain in more detail our methodology for calculating the net costs of BT Sport attributable to broadband. In particular, we explain:

- how we treat any elements of BT Sport costs that may be described as sunk costs;
- our allocation of the costs and revenues of BT Sport to the relevant period of the margin assessment; and
- how we use actual and forecast data to assess the May 2013 offer and the January 2014 offer.

Treatment of sunk costs [✂]

6.42 The largest single cost item for BT Sport is the cost of the content distribution rights. BT has suggested that some of the cost of some content distribution rights (particularly the FAPL rights) should be treated as a sunk cost.[340] TalkTalk based its analysis on its estimate of the full costs of BT Sport, and did not consider it appropriate to treat these as sunk costs.[341]

6.43 We understand that in the 2012 FAPL auction, the rights for the FAPL matches were divided into seven different packs. [✂].

6.44 BT claimed in its November submission that [✂] [342] BT acknowledged that [✂]. In its November submission BT suggested that [✂].[343]

[340] BT's November submission (confidential), 22 November 2013, page 6, paragraph 1.24 and page 45, paragraphs 7.24 to 7.26. See also BT's August submission (confidential), 6 August 2014, paragraph 1.7.
[341] TalkTalk complaint (confidential), 13 March 2013, page 101, footnote 225, and TalkTalk supplementary submission (confidential), 21 May 2013, pages 14 to 15, paragraphs 65 to 66.
[342] BT's November submission (confidential), 22 November 2013, page 30, paragraph 6.8.
[343] BT's November submission (confidential), 22 November 2013, page 6, paragraph 1.24 and page 45, paragraphs 7.24 to 7.26.

6.45 We have considered BT's argument that its investment in premium sports rights in 2012 was [✂][344] [✂]. In this case, [✂]. We consider that [✂].[345] In addition, we note that BT has continued to acquire other content rights as part of its overall strategy for BT Sport,[346] notably those for the UEFA Champions League, for considerable sums.

6.46 More generally, under the EEO approach there is a strong presumption for undertaking the margin assessment using the actual costs incurred by the dominant firm. For the purposes of this decision, we do not consider it appropriate or necessary to attempt [✂].[347] We have therefore included the full costs of the FAPL rights in our calculation of the net costs.[348]

6.47 We note that there may be instances in which finding that a dominant firm's margins are not sufficient to cover its downstream costs may not constitute an abuse, for example if it can be demonstrated that the pricing under investigation is not capable of having anti-competitive effects. Given that we do not find that BT's margins failed to cover its downstream costs in this case, we have not reached a view on any possible argument that BT's costs in relation to BT Sport do not appropriately reflect the value of BT Sport (if this could be shown) and how this would affect our analysis, including any assessment of anti-competitive effects.

The period over which we calculate the net costs of BT Sport

6.48 As set out at paragraph 5.133, our investigation assesses whether BT's prices for SFBB in the period from 1 February 2013 to 31 January 2014 resulted in a negative margin on its SFBB portfolio. For part of this period, BT's SFBB offer included access to BT Sport.[349] As noted at paragraph 5.133, we have conducted our assessment of BT's margins in relation to three cohorts corresponding to the February 2013 offer, the May 2013 offer and the January 2014 offer. We have included the costs of BT Sport in our assessment of BT's margins for its May 2013 offer and January 2014 offer.

6.49 TalkTalk conducted its analysis based on the last year of BT's FAPL distribution rights deal, which it considered to be *"highly favourable to BT"*.[350] For the purpose of its 'screening test' BT considered the revenues and costs of BT Sport over a three year period from 2013/14 to 2015/16.[351]

[344] BT's November submission (confidential), 22 November 2013, page 38, paragraph 6.33.
[345] BT's November submission (confidential), 22 November 2013, page 32, paragraph 6.14
[346] Indeed, a presentation given by BT to its ESG following the FAPL auction results stated that "*If we want to use the [BT Sport channel] to drive the Consumer business, we are likely to have to add to the 38 FAPL matches with 'some' other content*." BT's response to 4th s26 Notice, Q4 and Q5, 22 July 2013 - Annex 1A.2, slide 12, 21 June 2012.
[347] As explained in paragraph 5.24, we have also made no adjustments to BT's downstream costs for supplying retail SFBB services.
[348] [✂].
[349] Note that the BT Sport channels were not launched until August 2013.
[350] TalkTalk supplementary submission (confidential), 21 May 2013, page 9, paragraph 41.
[351] BT's November submission (confidential), 22 November 2013, page 43, paragraph 7.18.

We adopt a three-year time horizon for evaluating the costs and revenues of BT Sport for the margin assessment

6.50 In determining the net costs of BT Sport for the purposes of this case, we consider that an analysis based on BT Sport costs and revenues in its first year of operation would not provide an accurate reflection of its long-term profitability. In its first year, BT Sport costs are projected to be higher than in subsequent years, as BT faces one-off costs in launching the business. In addition, the revenues of BT Sport are expected to be lower in its first year than in subsequent years, as it takes time for BT to build its subscriber base. As a result, the net costs of BT Sport would be higher in 2013/14 than in subsequent years.

6.51 Given the above circumstances, we may consider if BT's cost recovery is economically sustainable over a longer time horizon, as future cost reductions or revenue increases materialise. We therefore consider that it is appropriate to assess the net costs of BT Sport over a three year time horizon. We consider three years to be reasonable because it reflects the period covered by BT's current FAPL rights, which are by far the largest single cost of BT Sport over the period of the assessment.[352] We note further that BT's business projections at the time when BT was bidding for the FAPL rights indicate that BT expected that the growth in direct revenues associated with the FAPL rights [✂].[353] [✂].[354] This suggests that any direct revenues from BT's current investment would be fully reflected in the changes in BT Sport revenues over a three year period.[355] We also note that in its November submission, BT, as a screening test, also estimated the costs and revenues for BT Sport over a three year period.[356]

We do not consider it appropriate to take a longer time horizon than three years or to include the potential impact of the investment in new sports rights within the three year period

6.52 We recognise that BT Sport is a new entrant into the premium sports channel arena. We also accept that BT Sport is likely to be a longer term venture than three years and even within the three year period BT is expanding its content holdings. BT's acquisition of the UEFA Champions League and UEFA Europa League rights for the period from 2015/16 to 2017/18 represents an investment of similar cost to the initial FAPL content.

---

[352] The FAPL rights account for [✂] of the total costs of BT Sport in 2013/14 to 2015/16. They will remain [✂] of BT Sport until 2015/16, if the UEFA Champions League rights are excluded from consideration.

[353] BT's response to 4th s26 Notice, Q4 and Q5, 22 July 2013 - Annex 1A.01, Slide 5, 23 May 2012.

[354] BT's response to 4th s26 Notice, Q4 and Q5, 22 July 2013 - Annex 1A.01, Slide 4, 23 May 2012.

[355] We have also considered a sensitivity in which, after the expiry of the FAPL rights, the BT Sport business has a terminal value equal to the price that BT agreed to pay for the ESPN business (i.e. a comparable business that had a similar content proposition but with the FAPL distribution rights expired) This reduces the costs that BT would need to recover during the duration of rights (under our methodology) by a relatively insignificant amount.

[356] BT explained that it used a three year period "*for the purpose of a "screening test" (i.e. a test to identify whether even potential issues of short term recovery of costs may arise).*" BT's November submission (confidential), 22 November 2013, page 43, paragraph 7.20.

6.53 However, we consider that an analysis of BT Sport profitability beyond the three year period would be subject to significant uncertainties. In particular, there are uncertainties about the outcomes of future rights auctions, BT's distribution and pricing strategy in the future and the take-up of the channels as a result. We note that [✂].

6.54 Accordingly, for the purposes of our assessment of BT's margins in the period under investigation, we do not make any allowance for any longer run payoff associated with the current investments in BT Sport, and therefore, we have assessed the net costs of BT Sport over a three year period.

6.55 In order to calculate the net costs potentially attributable to the SFBB cost stack (which, as we set out at paragraph 6.73, would be relevant to certain approaches to the recovery of the net costs), we have converted the net costs into an equivalent on-going net cost per subscriber per month. As explained in paragraph 5.131, we then assessed whether for a particular SFBB customer cohort, BT's ongoing margins, including an allocation of BT Sport net costs, are sufficient to recover net subscriber acquisition cost within the expected average customer lifetime of [✂] years.

6.56 In calculating the monthly net costs of BT Sport for the purpose of this case, we have used the following approach,[357] which is explained in more detail in Annex 3:

i) *In relation to the channel launch costs*, we assumed that any one-off costs incurred in the initial periods should be spread over the three years. The one exception to the three year period is for BT Sport [✂], where, in line with BT's internal accounting approach, we have spread the [✂] over [✂].[358] This results in a smoothing of costs over time. In this calculation, we have taken into account the cost of financing the capital that BT must raise in order to cover the initial channel launch costs.

ii) *In relation to the costs of content rights,* we limited these to the rights of those sporting events that have been available as part of the BT Sport offers that we are assessing (i.e. the May 2013 offer and the January 2014 offer).[359] We considered that the cost of these rights should be recovered over their duration. Given that some of BT's current rights are for more than three years, we attribute a proportion of the relevant costs to the first three years. For example, if BT has purchased a particular set of rights for six years, only half of those costs would be included in the BT Sport net costs.

iii) *In relation to direct revenues from BT Sport*, as noted above, we consider that direct revenues in the early months of BT Sport may not reflect the long-term profitability of BT Sport as it takes time for BT to build its subscriber base. We have therefore assessed BT Sport revenues by smoothing the BT Sport revenues over the three year period, noting that they are expected to grow over this time

[357] We note that our approach is akin to the DCF type of analysis that takes into account the dynamics of cost and revenue over the relevant time period, as well as discounting of cost and revenue cash flows.
[358] We note that this assumption does not have a material effect on the outcome of our no grounds for action decision.
[359] We therefore exclude the UEFA Champions League and UEFA Europa League rights that become part of the BT Sport content line up only from the 2015/16 season.

period. We take this growth into account using our own projections[360] of increases in revenues from residential customers on the Sky platform as well as commercial customers ('pubs and clubs').[361]

6.57 Our approach results in greater net costs being attributed to broadband than under the method adopted by TalkTalk in its supplementary submission, where it assessed BT Sport costs and revenues in the last year of the current deal with the FAPL, i.e. 2015/16. TalkTalk stated that "*such an approach is highly favourable to BT*" because it ignores "*station launch costs […], and the fact that customer numbers are likely to be lower in the first two years of the three year FAPL deal*."[362] As we include the one-off launch costs of the channel, and also take into account lower direct revenues from BT Sport in the early stages of BT Sport, our approach results in higher net costs for BT Sport, compared to TalkTalk's methodology, and is therefore less favourable to BT.

6.58 In BT's August submission, BT claimed that by spreading one-off start-up costs over three years (except studio costs, which are spread over five years), Ofcom's approach is highly conservative as it renders BT Sport net costs artificially high. BT contended that it is [✂]. [363] Moreover, BT argued that a three-year time period over which to spread the costs of BT Sport net costs is inconsistent with the monthly headroom calculated on the basis of an average consumer lifetime of [✂]. [364]

6.59 We note that the majority of the one-off costs are related to the distribution, sales and support of the current BT Sport content and in particular the FAPL rights for the three year period until 2015/16. As explained in paragraph 6.53, projecting these costs beyond a three year period would be subject to significant uncertainties. In addition, based on the sensitivity analysis presented in paragraph 7.44, spreading these one-off costs over a longer period of five years would have a limited impact on our results and would not change our conclusions.

6.60 Our approach tests whether BT's SFBB offer is sustainable across the ACL of [✂] years based on BT's current offer and costs incurred. As noted at 5.131 we consider this to be the appropriate approach even though we recognise that BT's future prices, offers and costs may vary from those prevailing at present. We consider this approach is also suitable for incorporating BT Sport costs into our test. We note that BT states that BT Sport is likely to endure longer than three years, but given the uncertainties noted in paragraph 6.53, we have not speculated on whether the costs will differ beyond this period in a way that is not reflected in movements in BT's future pricing. We also note that since we find that BT does not fail the margin squeeze test where the BT Sport costs are spread over three years, adopting BT's argument that the BT Sport costs should be spread over a longer period would not change our conclusion.

[360] Our projections are based on adaptations of BT's own forecasts, adjusted so they better track further information we have gathered on how actual performance is evolving.
[361] See Annex 3 for details.
[362] TalkTalk supplementary submission (confidential), 21 May 2013, page 9, paragraph 41.
[363] BT's August submission (confidential), 6 August 2014, para. 2.14.
[364] BT's August submission (confidential), 6 August 2014, para. 2.43.

Actual performance vs. forecasts

6.61 As discussed in paragraph 5.110, when measuring BT's SFBB profitability before the inclusion of BT Sport, we have used BTs historical revenues and costs, where available, and forecasts where there is no historical data available. This is consistent with the approach used by the European Commission in *Telefónica* in which the Commission used historical revenues and costs when available and the forecasts of the company when there was no historical data available.[365]

6.62 Similarly, our general preference in relation to BT Sport was to use actual data, where available, rather than relying on forecasts. However, as BT Sport is a new product, which only launched in August 2013, there is limited actual data available. In particular, a significant part of the three year period over which we assess the net costs of BT Sport is in the future. Therefore, we have also considered BT's internal forecasts, which we have compared with independent estimates where available.

6.63 In its November submission, BT commented that "downstream costs and revenues in relation to the provision of premium sport content are highly uncertain" and that there is "limited historical data available to conduct any analysis of margins."[366] We acknowledge the immaturity of the BT Sport business and the risk that using actual figures may mean an assessment of BT's margins based partly on information that BT did not have (and perhaps could not have known) when setting its prices. This risk is greatest when assessing BT's launch prices for BT Sport, which would, by definition, have been set before BT had any actual data in relation to its direct revenues from BT Sport.

6.64 We set out below how we have decided to use actual and forecast data for our assessment of the May 2013 offer and the January 2014 offer.

BT's May 2013 offer

6.65 At the launch of BT Sport in May 2013, there was no data available on the actual take-up of the BT Sport channels. Therefore, we consider it appropriate in this case to assess the BT Sport net costs for the May 2013 offer using BT's launch forecasts of BT Sport costs and volumes (the Launch Forecasts), which would reflect the information which BT used when deciding on its pricing of BT Sport. As we explain in detail in Annex 3, the Launch Forecasts appeared in line with the independent estimates produced at the launch of BT Sport. Therefore, we do not regard the Launch Forecasts as unreasonable at the time they were made. Our methodology for this assessment is discussed in more detail in Annex 3.

6.66 We also note, as explained in Annex 3, that [✂]. Therefore, we also present an assessment of the May 2013 offer using forecasts that are adjusted to take into account the actual performance of BT Sport as well as its most recent estimates of BT Sport costs. We include the results of this assessment in Section 7, paragraph 7.25.

[365] Case COMP/38.784 *Wanadoo España v Telefónica* (2007), paragraphs 378 to 382.
[366] BT's November submission (confidential), 22 November 2013, pages 40 to 41, paragraph 7.8.

BT's January 2014 offer

6.67 As explained in paragraph 5.135, we assess BT's margins over different time periods during which the results of our analysis may change substantially. For example, in relation to the January 2014 offer, we take into account BT's price increases in relation to BT's SFBB offer. Similarly, we think it is appropriate in this case to calculate the net costs in light of the information on actual costs and revenues available at the time, noting that the net costs attributable to the broadband business can be expected to evolve over time. For example, changes in the net costs may occur as a consequence of changes in BT's approach to distribution or pricing of BT Sport, changes to the content on BT Sport, or changes to other operating costs.

6.68 We have therefore assessed BT's January 2014 offer based on the estimates of the net costs that reflect the actual performance of BT Sport. In particular, we have projected, based on the assumptions that we consider reasonable, the growth in BT Sport volumes from their actual levels in December 2013 to 2015/16.[367] Our methodology for this is discussed in more detail in Annex 3.

How we approach the recovery of the 'net costs' of BT Sport

6.69 Having identified the net costs of BT Sport, we go on to consider the recovery of those net costs for the purposes of this investigation.

6.70 The net costs of BT Sport are shared broadband costs in that they support the provision of BT Sport to both SBB and SFBB customers. Since the focus of our investigation is on whether BT's pricing is anticompetitive in respect of SFBB services, it is necessary to consider what proportion of the net costs needs to be recovered from SFBB customers in order for the margin squeeze test to be passed.

6.71 We consider that there are a number of possible approaches to this question.

6.72 The net costs of BT Sport could be treated as a common cost to the provision of SBB and SFBB. On this basis, the recovery of the net costs of BT Sport could be assessed using a combinatorial approach, under which the net costs of BT Sport would need to be recovered from the SFBB portfolio only to the extent that BT is not able to recover those net costs from its margins on SBB. This could result in BT recovering the net costs of BT Sport entirely from its SBB products (if there were sufficient margins on those SBB products). We refer to this as the 'combinatorial approach' in the remainder of this document.

6.73 Alternatively, in view of the evidence that BT Sport may have been developed to support BT's SFBB business in particular, we have also considered approaches in which a specific proportion of the net costs of BT Sport is allocated to the SFBB portfolio. We have considered two specific possible allocation approaches, as set out below.

6.74 First, we have considered an approach in which the net costs of BT Sport are allocated to the SFBB portfolio in proportion to the overall number of SFBB and SBB BT broadband subscribers that are eligible to the 'free' BT Sport offer (whether or not

[367] [✂].

those subscribers take BT Sport). This approach is favoured by BT as a 'screening test', on the basis that the unrecovered costs of BT Sport should be treated "*as essentially an expense related to the acquisition and retention of all broadband customers.*"[368] We refer to this approach as the 'first allocation approach' in the remainder of this document.

6.75 Second, we have considered an approach that allocates a greater proportion of BT Sport costs to SFBB services than SBB services. We note that despite the fact that BT SFBB customers can access BT Sport on the Sky TV platform and via app on the same terms as SBB customers, the evidence we have seen shows that, during the period under investigation, SFBB customers were more likely to subscribe to BT Sport than SBB customers (see paragraph 6.34).

6.76 We have therefore considered an allocation approach in which the net costs of BT Sport are allocated to the SFBB portfolio in proportion to the number of SFBB subscribers that take BT Sport and the number of SBB subscribers that take BT Sport. This results in the same estimated cost per BT Sport subscriber, regardless of whether the subscriber is on SBB or SFBB. We refer to this approach as the 'second allocation approach' in the remainder of this document.

6.77 The second allocation approach would require more of the BT Sport net costs to be recovered from SFBB than the first allocation approach. However, we also note that in the future, where SFBB is likely eventually to account for the large majority of BT broadband subscribers, the differences between these two allocation approaches may diminish.

6.78 We also consider that both the first allocation approach and the second allocation approach would be likely to lead to a higher estimation of the net costs of BT Sport per SFBB subscriber than the combinatorial approach. As such, we consider that the combinatorial approach would be likely to be the most favourable to BT of the approaches identified above. We have therefore focussed our assessment on the allocation approaches, as if BT had sufficient margin to cover its downstream costs on those approaches, we could be reasonably confident that it would also have sufficient margin on the combinatorial approach.

6.79 In addition, we note that TalkTalk argued that Ofcom should allocate even more of the costs of BT Sport to SFBB than would be the case under the second allocation approach. TTG submitted a survey which it claimed showed that, among those BT broadband customers who used BT Sport, SFBB subscribers had a higher relative valuation of BT Sport than SBB subscribers and subscribers with access to BT Sport on TV value BT Sport more than subscribers with access only via the BT Sport app. TTG claimed that we should reflect these differences in relative valuation in our cost allocations.[369] TTG claimed that customers who are willing to spend more on BT Sport cause BT to incur more costs in the long-run as BT will spend more for sports rights for these customers. TTG also claimed that if customers valued BT Sport more, then competitors would need to offer greater discounts to those customers to compete with BT.

6.80 We do not agree with TalkTalk's proposal. We consider that to the extent that BT's costs for BT Sport are related to the value obtained by customers, then this would be reflected in the second allocation approach, and we see no clear reason to go

[368] BT's November submission (confidential), 22 November 2013, page 44, paragraph 7.22.
[369] Survey commissioned from Ipsos MORI, submitted on 8 September 2014.

beyond this. Moreover, TalkTalk's arguments and evidence point to reliance on customer valuations for BT Sport, whereas our approach has focussed on the costs of BT Sport. TalkTalk's customer survey evidence, if reliable, would point to customers having a lower valuation for BT Sport than the average net costs for BT Sport that we have used in our assessment of BT's margin. We have therefore not considered the merits of TalkTalk's allocation further.

6.81 As set out in Section 7, our analysis shows that BT would have a positive margin on both the May 2013 offer and the January 2014 offer under both the first and second allocation approaches described above. In light of this conclusion, we have not carried out a test based on the combinatorial approach for the purpose of this no grounds for action decision. As we conclude that BT would have a positive margin on both the May 2013 offer and the January 2014 offer under each of the approaches set out above, it is not necessary for us to reach a conclusion as to whether any of those approaches should be preferred, and we have not done so.

The size of the SFBB customer base

6.82 As explained in section 5, we have conducted the margin squeeze test at the total SFBB portfolio level. This implies that BT may offer differentiated SFBB packages from those of its rivals and target different customer segments by pricing some products within SFBB packages more aggressively than others, so long as the imputed margins for the entire SFBB portfolio are sufficient to recover the costs of an EEO. Similarly, by including BT Sport for free in its SFBB packages, BT may fail to recover an allocation of BT Sport costs from those customers that take a BT Sport subscription, so long as it earns sufficiently high margins on its SFBB customers that do not subscribe to BT Sport. Therefore, under both the first and second allocation approaches described at paragraphs 6.74 to 6.81, the SFBB portfolio test is based on spreading the proportion of the net costs of BT Sport that is allocated to BT's SFBB portfolio across the entire BT SFBB base in order to arrive at a BT Sport net cost per 'average' SFBB portfolio customer.

6.83 We note that BT's SFBB base has been growing over the period of our investigation and is forecast to grow further in future. In line with the cohort analysis, as outlined in paragraphs 5.134 and 5.137, we have based our analysis on the information relevant to each period under investigation. As such, we have assessed each offer based on the number of SFBB customers that BT had at the launch of that offer. We do not consider it appropriate in this case to take forecast future growth into account in our margin squeeze assessment because of the risk that the growth might itself reflect the outcome of the alleged margin squeeze. We have also considered a sensitivity that removes from the margin squeeze assessment the estimated growth in SFBB customers from May 2013 to December 2013 that is associated with the BT Sport offer. The impact of this is modest and including the adjustment would not alter our no grounds for action decision (see paragraph 7.46 for details).[370]

6.84 Finally, we note that to the extent that the BT Sport offer helps BT retain its broadband customers, it could also result in lower churn rates and a longer average customer lifetime (ACL). The longer the ACL, the easier it is for BT to recover its upfront customer acquisition costs with the recurring SFBB margins. However, as

[370] We note that even if we decided to consider forecasts of growth in the SFBB base, we would need to address a number of issues, such as the need to test whether the forecasts of a firm being investigated are reasonable, or whether the projected growth is not a result of exclusion of as efficient rivals (Case COMP/38.784 *Wanadoo España v Telefónica* (2007), paragraphs 333 to 335).

explained in more detail in Annex 1, we have based our ACL estimates on the churn rates for SBB before the BT Sport channels were launched. Therefore, our ACL estimates are unaffected by the BT Sport offer.

Section 7

Results of Ofcom's margin squeeze assessment

Introduction

7.1 In this section, we set out our assessment of BT's margins based on the methodology set out in Sections 5 and 6, and our more detailed analysis in Annexes 1 to 3.

7.2 As set out in Section 5, we have used a cohort approach to assess the profitability of BT's SFBB portfolio based on the prices charged to new customers. As BT's SFBB offer changed over the period of our assessment, we have presented the results separately for the periods covered by the February 2013 offer, the May 2013 offer and the January 2014 offer. In relation to the May 2013 offer and the January 2014 offer we also take into account the costs of providing BT Sport to BT's SFBB customers.

7.3 As we have found that BT's revenues from each of the February 2013, May 2013 and the January 2014 offers were sufficient to cover its costs of providing SFBB, we do not consider it necessary to assess BT's margins on any of its SFBB offers prior to February 2013.[371]

7.4 Sections 5 and 6 explain our methodology for assessing BT's margins on its SFBB portfolio. Annexes 1 to 3 set out in detail how this methodology was applied to calculate BT's margins in respect of the February 2013, May 2013 and January 2014 offers.

7.5 This section is structured as follows:

i) first, we provide our assessment of BT's margins on its SFBB portfolio for the cohort of customers acquired: (a) from 1 February 2013 to 8 May 2013 inclusive (the February 2013 offer), (b) from 9 May 2013 to 3 January 2014 inclusive (the May 2013 offer, which includes BT's offer of 'free BT Sport' to its broadband customers), and (c) from 4 January 2014 to 31 January 2014 (the January 2014 offer, which also includes BT Sport);

[371] Although we have not calculated BT's margins on SFBB prior to February 2013, we note that the headline prices of BT's Infinity products were relatively stable in the preceding two years (Source: Pure Pricing reports for the months between January 2011 and February 2013), as were its line rental charges. Furthermore, as the majority of our cost estimates are based on BT's 2012/13 accounts, we would not expect significantly different cost estimates for earlier periods during that financial year. Therefore, we consider it likely that any analysis of BT's margins on offers during that financial year would be broadly similar to our assessment of the February 2013 offer. We also note that before March 2012, BT's fibre service was available to less than a third of the UK population (Source: Ofcom 2012 Communications Market Report, page 282), and that BT had take-up on fibre of approximately [✂] customers at the end of 2011 (Source: BT's response to 9th s26 Notice, Q16, 21 February 2014). Given our finding that BT's margins on the February 2013 offer are sufficient to cover its upfront costs over an average customer lifetime, we have not assessed these earlier periods further.

ii) second, we give an overview of the sensitivities that we have applied to our central methodology, and how these affect the results (set out more fully in Annexes 1 to 3);

iii) third, we set out our conclusions in relation to BT's margins on its SFBB portfolio for each of the three periods we have considered and provide our comments in relation to the potential for anti-competitive effects in the downstream market as a consequence of any failure to maintain a sufficient margin.

Assessment of BT's February 2013 offer

7.6 As set out in Section 5, we have considered BT's margins on its entire SFBB portfolio, including all Infinity and SFBB Plusnet products. We calculated BT's revenues and ongoing and upfront costs per customer, and the monthly margin BT would make on each SFBB customer. As set out in Annex 1, we determined that a reasonable average customer lifetime would be [✂] years, based on the average customer lifetime for BT's SBB customers. The results of our analysis are set out in Table 7.1.

Table 7.1: Summary of monthly margins and acquisition costs per SFBB customer (February 2013 offer)

	Per customer, per month
Monthly Revenues ex-VAT	£[✂]
Monthly Ongoing wholesale costs	(£[✂])
Monthly Ongoing downstream costs	(£[✂])
Monthly Margin	£[✂]
Upfront costs	(£[✂])
Payback period	[✂]years
Headroom	£[✂]

7.7 Table 7.1 shows the revenues, costs and margins for an average SFBB customer across the customer lifetime.[372] Table 7.1 shows that for the cohort of customers acquired in the period from 1 February to 8 May 2013, BT would expect to earn an average monthly revenue of £[✂] per customer over the average customer lifetime. We calculated that BT would incur average wholesale input costs of £[✂] per month and average monthly ongoing downstream costs of £[✂]. This results in an ongoing monthly average margin on its SFBB portfolio of £[✂] over the customer lifetime.

7.8 We have calculated that BT incurs an average upfront acquisition cost of £[✂] per SFBB subscriber and has a cost of capital of 9.9 per cent. The ongoing monthly margin is sufficient to recoup these acquisition costs in [✂] years, which is well below BT's average customer lifetime of [✂] years. We calculated that BT's

[372] As explained in Annex 1, average revenues, costs and margins differ between the first 18 months of a customer's subscription and the rest of the customer lifetime due to a proportion of triple-play customers that cease taking TV. Table 7.1 presents the average revenues, costs and margins over the customer lifetime.

February 2013 offer would only be unprofitable if its ongoing monthly margin fell by £[✂] per customer per month (the headroom figure).

7.9 We note that the result is significantly different from the result presented by TalkTalk in its complaint, which suggested that BT's Infinity 1 dual-play product would be unprofitable after [✂]**[10-60]** years.[373] The material differences between TalkTalk's conclusions, which were largely based on its estimates of BT's revenues and costs, and our assessment of the Infinity 1 dual-play product and triple-play product based on the actual revenues and cost information provided by BT, can be explained as follows:

i) [✂]

ii) [✂]

Assessment of BT's May 2013 offer

7.10 As described in more detail in Sections 2 and 6, on 9 May 2013, BT announced that it would offer BT Sport to its SBB and SFBB broadband customers at no additional charge, from its launch in August 2013.

7.11 In order to assess the profitability of the May 2013 offer, we first calculated BT's SFBB margin per customer before taking into account BT Sport (the headroom figure). In order to assess the impact of the inclusion of BT Sport, we then estimated the net costs of BT Sport per SFBB subscriber applying the first and second allocation approaches (see paragraphs 6.74 to 6.81), and deducted these net costs from the headroom figure to give an overall margin on the SFBB portfolio under each approach.

7.12 In terms of BT's margin before BT Sport, there were some changes in BT's revenues and costs relative to the February 2013 offer. In particular, BT made some adjustments to its SFBB pricing. BT also increased the price of its Line Rental Saver option. Its wholesale costs decreased due to the reduction in the monthly rental charge for WLR by BT Openreach. There were also increases in some upfront cost items. The impact of these changes on our calculations are set out in Table 7.2.

[373] TalkTalk complaint (confidential), 13 March 2013, page 98, paragraph 387.

Table 7.2: Summary of monthly margins and acquisition costs per SFBB customer (May 2013 offer)

	per customer, per month
Monthly Revenues ex-VAT	£[✂]
Monthly Ongoing wholesale costs	(£[✂])
Monthly Ongoing downstream costs	(£[✂])
Monthly Margin	£[✂]
Upfront costs	(£[✂])
Payback period	[✂] years
Headroom	£[✂]

7.13 Table 7.2 shows that following the same methodology as for the February 2013 offer, and before taking into account BT Sport, BT's SFBB portfolio would only be unprofitable if its ongoing monthly margins fell by £[✂] per customer (i.e. BT had headroom of £[✂]).

7.14 We then calculated the net cost of BT Sport per SFBB subscriber. As explained in Section 6 and Annex 3, we estimated BT Sport net costs for the May 2013 offer on the basis of the costs and subscriber volumes in BT's Launch Forecasts. We adjusted BT's Launch Forecasts by spreading the rights costs evenly over their duration, the one-off costs evenly over the three-year period, and smoothing revenues over the same period. We then estimated the average monthly net costs of BT Sport in 2013/14, as this most closely reflects the costs of BT's SFBB offer during the period of investigation. On this basis, we estimated that BT would need to recover approximately £[✂] of BT Sport costs each month from the margins of its broadband customers.

7.15 As explained in Section 6, we have assessed BT's margins on its SFBB portfolio for the May 2013 offer using both the first and second allocation approaches set out at paragraphs 6.74 to 6.81.[374]

7.16 The first allocation approach allocates the BT Sport net costs in proportion to BT's overall number of SFBB and SBB customers that are eligible to the 'free' BT Sport offer. As at the end of June 2013, [✂] per cent of BT's broadband customers took SFBB, so under this method we would allocate [✂] per cent of the net costs of BT Sport to the SFBB portfolio. Given that to date BT's SFBB customers were more likely to take BT Sport, this approach allocates fewer costs to SFBB than the second allocation approach.

7.17 The second allocation approach allocates the BT Sport net costs based on the actual take-up of BT Sport by SFBB customers. As at September 2013, [✂] per cent of the BT Sport subscribers who received the channels as part of their BT broadband

[374] We have also considered a combinatorial approach, but did not consider it necessary to carry out that test for the purpose of this no grounds for action decision.

package took BT's SFBB services. Under this approach, we therefore apportion [✂] per cent of the net costs of BT Sport[375] to be recovered from BT's SFBB portfolio.

7.18 As explained in Section 6 and Annex 3, the relevant proportion of the net costs are then spread across BT's SFBB base at the launch of BT Sport (we have used the relevant figure for the end of June 2013), which was approximately [✂] subscribers, adjusted to include Plusnet customers, to arrive at the net costs per SFBB portfolio customer.

7.19 On this basis, we have calculated that:

i) Under the first allocation approach, BT would incur costs of £[✂] per month for providing BT Sport to its SFBB customers. After deducting £[✂] from the headroom for the May 2013 offer, BT's overall margin on the May 2013 offer would be £[✂].

ii) Under the second allocation approach, BT would incur costs of £[✂] per month for providing BT Sport to its SFBB customers. After deducting £[✂] from the headroom for the May 2013 offer, BT's overall margin on the May 2013 offer would be £[✂].

7.20 This is shown in Table 7.3:

Table 7.3: Summary of margins after inclusion of BT Sport (May 2013 offer)

	Allocation to SFBB in proportion to overall number of SFBB and SBB customers	Allocation to SFBB based on BT Sport take-up
Headroom	£[✂]	£[✂]
BT Sport monthly net cost per SFBB subscriber	£[✂]	£[✂]
Margin after BT Sport	£[✂]	£[✂]

7.21 As explained in detail in Annex 3, this calculation is based on the Launch Forecasts for BT Sport, adjusted to remove unannounced price increases, any speculative content spend and to spread one-off launch costs evenly over the relevant time period. As set out in Section 6, given the immaturity of the BT Sport business, and the lack of historical data available to BT when setting its prices, we consider it appropriate to base our margin assessment on the information which was available to BT when it set its launch prices. BT's Launch Forecasts were compiled prior to May 2013 and so constituted the main information available to BT at the time it set the launch prices for BT Sport. As set out above, we find that under each of the first and second allocation approaches, BT had a positive margin on its SFBB portfolio for the May 2013 offer after taking into account the net costs of BT Sport.

7.22 Subsequent to the compilation of BT's Launch Forecasts, there have been changes to both BT's revenues and costs in relation to BT Sport. Prior to the start of the FAPL

[375] Subject to excluding some SBB specific costs from the BT Sport total monthly net cost estimate, see Annex 3 for details.

season on 17 August 2013, BT purchased additional sports rights (notably to the FA Cup) and entered into wholesale agreements with Virgin Media and Setanta for the distribution of the BT Sport channels.

7.23 As discussed in Annex 3, for the purpose of our no grounds for action decision, we have not incorporated these rights payments and additional revenue sources in our assessment of the May 2013 offer. This is because these items were not in BT's Launch Forecasts. However, we note that including the Virgin Media and Setanta revenues and the cost of the FA Cup rights in our assessment of the May 2013 offer would increase BT's margin by £[✂] per customer per month under the first allocation approach and by £[✂] under the second allocation approach.

7.24 In addition, [✂]. [✂], the level of direct revenues from residential Sky subscribers or commercial premises in particular would only have become apparent to BT after the start of the FAPL season on 17 August 2013. For the reasons given in Section 6, we do not consider it appropriate to assess BT's margins on this basis. As set out in Section 6, we consider the Launch Forecasts to be a reasonable estimate of the revenues and costs of BT Sport on the information available to BT at the time it announced the launch of BT Sport.

7.25 We note that assessing the May 2013 offer using BT Sport revenues adjusted to the current performance (and so taking account of the actual level of revenues from residential subscribers on the Sky platform and commercial premises, as well as BT's actual wholesale contracts and rights purchases) would result in a positive margin of £[✂] if we allocated the net costs of BT Sport to the SFBB portfolio in proportion to BT's overall number of SFBB and SBB customers (the first allocation approach), or a modest negative margin of -£[✂] if we allocated the net costs of BT Sport to the SFBB portfolio on the basis of take-up of BT Sport by SFBB customers (the second allocation approach).

Assessment of BT's January 2014 offer

7.26 On 4 January 2014, BT made some further adjustments to its SFBB offer. Specifically, it increased some of its prices, in particular the cost of line rental, certain call charges (for example, international calls) and new charges for two previously free call features (BT Answer 1571 answer phone service and BT Privacy with Caller Display). BT also increased the prices of some of its SFBB packages, but as these price increases applied only to customers acquired before 19 April 2013, these have not been factored into our analysis, which considers new customers only. We also calculated an increase in BT's wholesale costs (due to an increase in the monthly rental charge for WLR) and a slight increase in the upfront costs compared to the May offer.

7.27 We adopted a similar approach in assessing the January 2014 offer to assessing the May 2013 offer. We first calculated BT's SFBB margin per customer before taking into account BT Sport (the headroom figure). The results of this assessment are set out in Table 7.4.

Table 7.4: Summary of Monthly margins and Acquisition Costs per SFBB Customer (January 2014 offer)

	per customer, per month
Monthly Revenues ex-VAT	£[✂]
Monthly Ongoing wholesale costs	(£[✂]
Monthly Ongoing downstream costs	(£[✂])
Monthly Margin	£[✂]
Upfront costs	(£[✂])
Payback period	[✂] years
Headroom	£[✂]

7.28 We then estimated the net costs for BT Sport and deducted the net costs from the headroom figure to give an overall margin on the SFBB portfolio.

7.29 As explained in Section 6, we have assessed the January 2014 offer based on our estimates of the net costs that reflect the actual performance of BT Sport. As set out in Annex 3, we estimated that BT Sport net costs adjusted to current performance were £[✂] per month on average in 2013/14.

7.30 As with the May 2013 offer, we have assessed BT's margins on its SFBB portfolio for the January 2014 offer using both the first and second allocation approaches set out at paragraph 6.74 to 6.81: the first allocation approach allocating the net costs of BT Sport to the SFBB portfolio based on BT's overall number of SFBB and SBB customers eligible to the 'free' BT Sport offer, and the second allocation approach allocating the net costs of BT Sport to the SFBB portfolio based on the take-up of BT Sport by SFBB customers.[376]

7.31 As at the end of December 2013, [✂] per cent of BT's broadband customers took SFBB, so under the first allocation approach (allocation based on BT's overall number of SFBB and SBB customers that can access BT Sport for free), we would allocate [✂] per cent of the net costs of BT Sport to the SFBB portfolio.

7.32 The actual take-up figures as at the end of December 2013 showed that [✂] per cent of the BT Sport subscribers who received BT Sport as part of their BT broadband package were on BT's SFBB products. As such, under the second allocation approach (allocation based on take-up), [✂] per cent of the net costs[377] would be recovered from BT's SFBB portfolio.

7.33 As explained in Section 6 and Annex 3, in assessing the margins on BT's January 2014 offer, we have spread the relevant proportion of the net costs of BT Sport

[376] As explained at paragraph 6.74 and 6.81, we have also considered a combinatorial approach, but did not consider it necessary to carry out that test for the purpose of this no grounds for action decision.

[377] Subject to excluding some SBB specific costs from the BT Sport total monthly net cost estimate, see Annex 3 for details.

across BT's entire SFBB base (including Plusnet) that BT had at the end of December 2013, in order to calculate a cost for BT Sport per SFBB customer of £[✂] using the first allocation approach, or £[✂] per SFBB portfolio customer per month using the second allocation approach.

7.34 The results of our analysis are set out in Table 7.5.

Table 7.5: Summary of margins after inclusion of BT Sport (January 2014 offer)

	Allocation to SFBB in proportion to overall number of SFBB and SBB customers (the first allocation approach)	Allocation to SFBB based on BT Sport take-up (the second allocation approach)
Headroom	£[✂]	£[✂]
BT Sport monthly net cost per SFBB subscriber	£[✂]	£[✂]
Margin after BT Sport	£[✂]	£[✂]

7.35 Table 7.5 shows that :

- taking into account the price changes, we calculated BT's SFBB headroom figure in January 2014 as £[✂] before taking into account BT Sport;
- taking into account BT Sport, we calculated that each SFBB customer would need to contribute £[✂] per month to the recovery of BT Sport costs using the first allocation approach, or £[✂] per month if using the second allocation approach;
- after deducting £[✂] from the headroom, BT's margin taking into account BT Sport under the first allocation approach is £[✂]; and
- after deducting £[✂] from the headroom, BT's margin taking into account BT Sport under the second allocation approach is £[✂].

7.36 On the basis of the above, we find that under each of the first and second allocation approaches, BT had a positive margin on its SFBB portfolio for the January 2014 offer after taking into account the net costs of BT Sport.

7.37 We note that our estimate of the monthly net costs of BT Sport in relation to the January 2014 offer is [✂] than the costs presented by BT in its submission.[378] On the basis of its Launch Forecasts,[379] BT estimated that the average net costs of BT Sport are £[✂] per year, or £[✂] per month. The difference arises largely because [✂], in addition to the following adjustments that we have made to BT's Updated Forecasts (see Annex 3 for details):

[378] BT's November submission (confidential), 22 November 2013, page 44, paragraph 7.21.
[379] BT's response to 6th s26 Notice, Q21, Q24 and Q25, 28 October 2013.

i) In relation to BT's forecasts of costs, we have excluded uncommitted rights and programming, as well as included our estimate of costs of capital of the one-off costs and rights payments.

ii) In relation to BT's forecasts of revenue from BT Sport, as explained above, we have estimated these on the basis of volumes adjusted to the actual performance. Contrary to BT's approach, we have also assumed that current channel subscription prices do not increase over time.

7.38 BT estimated that this would result in a cost of £[✂] per SFBB user per month, by spreading the net costs of BT Sport over its entire broadband base of [✂] million users as at the end of 2012/13. We used figures for BT's SFBB and SBB customer base as at December 2013 (the end of Q3 2013/14), rather than the Q4 2012/13 figures used by BT. Although spreading the costs over a larger base implies a lower net cost per SFBB customer, our monthly net costs [✂]. In addition, under the second allocation approach, we allocated more costs to SFBB, based on the actual take-up of BT Sport among BT SFBB and SBB customers. Given that, as noted in paragraph 6.34, over the period under investigation SFBB customers were more likely to subscribe to BT Sport, this approach resulted in a higher allocation of costs to BT's SFBB portfolio than under the first allocation approach and BT's estimate.

7.39 We also note that our estimates differ from those presented in TalkTalk's supplementary submission. Based on Macquarie Research estimates, TalkTalk calculated the net costs of BT Sport to be £329 million[380] per year, or £27.4 million per month.[381] We note that [✂],[382][✂]. TalkTalk assumes [✂].

7.40 In addition, as noted in Section 6, TalkTalk suggested allocating more costs of BT Sport to SFBB on the basis that SFBB subscribers have a higher relative valuation of BT Sport than SBB subscribers and subscribers with access to BT Sport on TV value BT Sport more than subscribers that access BT Sport online or via the app.[383] As explained in section 6, we have not used TalkTalk's suggested approach.

Sensitivity analysis

7.41 We have found BT to have a positive margin on its SFBB portfolio for each of its February 2013, May 2013 and January 2014 offers under both the first and second allocation approaches that we have identified for the purpose of this no grounds for action decision, each of which allocates a proportion of the net costs of BT Sport to SFBB.

7.42 Although we consider that our approach overall represents a reasonable view of BT's margins for its SFBB products, we recognise that any modelling exercise involves making a number of assumptions. We have considered the sensitivity of our analysis to changes in our assumptions and we present below a range of possible

[380] TalkTalk supplementary submission (confidential), 21 May 2013, page 15, table 3.4.
[381] Estimated dividing £329m over 12 months in a year.
[382] TalkTalk supplementary submission (confidential), 21 May 2013, page 5, paragraph 17.
[383] TalkTalk's August submission (confidential), 28 August 2013, paragraph 1.23.

sensitivities. We first present those in BT's favour before presenting those which are less favourable to BT.

7.43 We have calculated the magnitude of the positive sensitivities relative to our assessment of BT's margins based on the first allocation approach, and have calculated the magnitude of the negative sensitivities relative to our assessment of BT's margins based on the second allocation approach. On our assessment, the first allocation approach results in a higher margin to BT than the second allocation approach (as fewer net costs of BT Sport are allocated to SFBB) and therefore applying the sensitivities in this way will show the widest range of results overall. As discussed at paragraph 6.81, given that we find a positive margin on both the first and second allocation approaches, we have not applied the combinatorial approach in this analysis, as we consider that this would be likely to be even more favourable to BT.

7.44 The sensitivities which would be more favourable to BT are as follows:

i) Our analysis only considers the profitability of new customers and does not take into account the profitability of existing SFBB customers that were acquired in earlier periods. We consider that taking into account the profitability of existing SFBB customers would be likely to be more favourable to BT[384], but we have not sought to quantify the magnitude of this effect for the purpose of this no grounds for action decision.

ii) We have calculated BT's costs of bandwidth based on a methodology consistent with the regulatory accounts published for 2012/13. We note that these costs have since been restated downwards in the 2013/14 regulatory accounts. If our analysis used the revised bandwidth costs, then BT would have an additional monthly margin of £[✂] on the February 2013 offer, £[✂] per month on the May 2013 offer, and an additional £[✂] on the January 2014 offer. [✂].

iii) We assume that many cost categories (e.g. customer service overheads, indirect BT TSO costs, non-campaign marketing) are fully scalable with SFBB volumes in the long run and that there are no economies of scale (see Annex 2 for further details). If we were to assume a lower cost volume elasticity of 0.5 for costs that we consider to be variable in the long run, this would increase BT's monthly margin by £[✂], £[✂] and £[✂] for the February 2013, May 2013 and January 2014 offers respectively.

iv) In relation to BT Sport, we have assumed that all BT Sport launch costs need to be recouped over a three year period, except for studio costs which we spread over five years. Although this is the approach taken by BT in its forecasts, it may be arguable that it would be reasonable to spread the launch costs over a longer period (noting in particular BT's acquisition of UEFA Champions League and Europa League rights from 2015/16 to 2017/18). Spreading the launch costs over a five year period (i.e. until the end of the UEFA rights) would increase BT's monthly margins by £[✂] and £[✂] for the May 2013 and January 2014 offers respectively.

[384] For example, as set out in Annex 1, in January 2014 BT increased monthly broadband subscriptions prices to existing customers only.

v) In relation to BT Sport, in calculating our assessment of its actual performance for the January 2014 offer, we have taken a conservative assessment of future changes in BT's revenues by assuming that BT's direct revenues from residential subscribers on Sky and commercial premises for BT Sport will grow by [✂] per cent after the end of December 2013 to 2015/16, and that HD revenues remain flat at their current level in January 2014, whereas the actual growth may be higher than this. If we assumed that direct revenues from residential subscribers on Sky and commercial premises for BT Sport grow by [✂] per cent, similar to what BT expected in its Updated Forecasts, and that HD revenues double after the expiry of the free HD offer, this would have a positive impact on BT's monthly margins of £[✂].

vi) We have assumed that all BT Sport content rights costs need to be recovered (linearly) over their duration. This implies both that BT needs to recover the full value of the rights and that BT's investment in content distribution rights has no value after the end of the duration of the rights. If we were to exclude the [✂], BT's monthly margin would increase by £[✂] and £[✂] respectively for its May 2013 and January 2014 offers. Moreover, including a terminal value of BT Sport, based on the price BT agreed to pay for ESPN, would have a positive impact on BT's monthly margin of £[✂] for both the May 2013 and January 2014 offers.

vii) We have included £[✂] SG&A costs in relation to the launch of BT Sport in the calculation of the SFBB headroom rather than BT Sport monthly net costs. In its August submission, BT argued that this may result in overstated SG&A costs if all of these costs are treated as ongoing monthly costs.[385] As noted in paragraph A3.204, we had insufficient information to determine whether all of these £[✂] costs were treated as ongoing costs. However, treating these costs as BT Sport one-off costs instead would have a limited positive impact on the SFBB margin of less than £[✂].

7.45 We note that if we were to adopt all of the positive sensitivities listed above, BT's monthly margin would increase by £[✂] for the February 2013 offer, and by £[✂] for the May 2013 offer and £[✂] for the January 2014 offer.

7.46 We have also considered a number of sensitivities that would be less favourable to BT. We summarise these sensitivities below. As noted above, the magnitude of these sensitivities is calculated relative to our assessment of BT's margins based on the second allocation approach.

i) We assume that the cost of billing and bad debt are the same per customer regardless of the number of products a customer takes. Although this is reasonable for billing, the cost of bad debt may increase with the number of products a customer takes. BT does not disaggregate billing and bad debt costs. If we were to assume that both billing and bad debt costs vary based on the number of products a customer takes, this would reduce BT's headroom by £[✂] for the February 2013 offer, £[✂] for the May 2013 offer and £[✂] for the January 2014 offer.

ii) We have assumed that [✂] per cent of BT TV subscribers will cease subscription after 18 months. If we assumed no churn at all on BT TV throughout the ACL (such that the ACL for a BT TV customer is the same as for its broadband base)

[385] BT's August submission (confidential), 6 August 2014, paragraph 2.44.

this would reduce BT's headroom by £[✂] for the February 2013 offer, £[✂] for the May 2013 offer and £[✂] for the January 2014 offer.

iii) We have used a weighted average cost of capital (WACC) of 9.9 per cent when discounting future SFBB margins and when estimating the financing costs for BT Sport. This is the WACC that was published in the Business Connectivity Market Review statement in 2013 (the 2013 BCMR Statement)[386] and is therefore the relevant rate for the time period under investigation and the rate which BT would have been aware of when setting its pricing for the May 2013 and January 2014 offers. We note that the 2014 WBA Statement adopts a forecast WACC of 10.8 per cent for the 2014/15 – 2016/17 charge control period.[387] If we were to use the higher WACC, BT's monthly margin would decrease by £[✂] for the February 2013 offer, £[✂] for the May 2013 offer and £[✂] for the January 2014 offer.

iv) In assessing the January 2014 offer, we have spread the net costs of BT Sport over BT's SFBB base as at 31 December 2013. As discussed in paragraph 6.84, in the assessment of BT's profitability, we considered a sensitivity which excluded an estimate of those SFBB customers BT acquired as a result of its BT Sport offer. In this sensitivity, we excluded [✂] SFBB customers that we estimated to be the newly acquired BT broadband customers who took both SFBB and BT Sport in the period May 2013 to December 2013, as well as [✂] customers that BT forecast to retain to the end of December 2013. This would reduce BT's monthly margin by £[✂] for the May 2013 cohort and £[✂] for the January 2014 cohort.

v) We have used BT Sport net costs in 2013/14 as this is the time period under investigation. We note that based on our estimates, certain BT Sport costs are expected to increase in 2014/15. If we were to use the BT Sport monthly net cost as in 2014/15 (but retaining the December 2013 SFBB base and BT Sport take-up), this would reduce BT's monthly margin by £[✂] in May 2013 and £[✂] in January 2014.

7.47 We note that if we were to adopt all of the negative sensitivities listed above, BT's monthly margin would decrease by £[✂] for the February 2013 offer, £[✂] for the May 2013 offer and £[✂] for the January 2014 offer.

7.48 Figure 7.1 shows the possible impact of the range of the sensitivities set out above on our assessment of BT's margins on the February 2013 offer, May 2013 offer and the January 2014 offer.

[386] 2013 BCMR Statement, see Annex 12, (Table A14.1) http://stakeholders.ofcom.org.uk/binaries/consultations/business-connectivity/statement/annexes8-17.pdf

[387] 2014 WBA Statement, see Annex 7 (Table A7.32) http://stakeholders.ofcom.org.uk/binaries/consultations/review-wba-markets/statement/Statement_Annexes.pdf

Figure 7.1: Summary of central ranges with sensitivities (per month, per customer)

[✂]

Conclusion of margin squeeze assessment

7.49 For the reasons set out above, we consider that BT maintained a sufficient margin between its upstream and downstream prices such that it covered its downstream costs.

7.50 Specifically, our assessment shows that BT had:

- a positive margin on its February 2013 offer of £[✂];
- a positive margin on its May 2013 offer of £[✂] under the first allocation approach, which allocates the net costs of BT Sport to the SFBB portfolio based on BT's overall number of SFBB and SBB customers, and £[✂] under the second allocation approach, where the net costs of BT Sport are allocated to the SFBB portfolio based on take-up; and
- a positive margin on its January 2014 offer of £[✂] under the first allocation approach, and £[✂] under the second allocation approach.

7.51 Moreover, as shown in Figure 7.1, the range of positive sensitivities on each of the three offers is greater than the range of negative sensitivities.

7.52 As set out at paragraph 6.72, we note that we have also identified an approach in which we assess the net costs of BT Sport on a combinatorial basis. As we consider that BT has a positive margin under both of the first and second allocation approaches, and we consider that the combinatorial approach to the net costs of BT Sport would likely be more favourable to BT than either of these approaches, we

have not carried out an assessment of BT's margin using the combinatorial approach for the purpose of this no grounds for action decision, as we can be reasonably confident that BT would have a positive margin under that approach also. As we consider BT would therefore pass on each of the three approaches identified, it is not necessary for us to reach a conclusion as to which is the correct approach, and we have not done so.

7.53 We note that adopting some or all of the negative sensitivities set out at paragraph 7.46 could lead to the calculation of a modest negative margin[388] on either or both of the May 2013 and/or January 2014 offers. However, given the margin for error implied by the range of sensitivities taken as a whole and the inherent uncertainties in any modelling approach, we consider that a modest negative margin calculated on this basis would be unlikely to be enough for us to conclude with certainty that BT's margins on its May 2013 or January 2014 offer were negative.

7.54 The implication of our analysis is that an EEO should be able to compete with BT in relation to the SFBB portfolio. It should be noted that a finding that BT's margins were not sufficient to cover its upfront costs over an average customer lifetime in respect of any of the offers (and on any of the approaches we have suggested in relation to BT Sport) would not necessarily mean that we would have grounds to find an infringement of Article 102 or the Chapter II prohibition. For example, it would be necessary for us to conduct a further separate assessment of the potential for anti-competitive effects, which we have not done for the purpose of this decision.

7.55 Our assessment indicates that BT maintained a sufficient margin in respect of the February 2013 offer, the May 2013 offer and the January 2014 offer. We therefore consider that the conditions of the Chapter II prohibition of the Act and/or Article 102 of the TFEU are not all met.

7.56 As such, we find that we have no grounds for action in relation to the February 2013 offer, May 2013 offer or January 2014 offer.

[388] By negative margin we mean that a margin that is insufficient to cover upfront costs over an average customer lifetime.

Annex 1

BT's margins on superfast broadband before BT Sport

Introduction

A1.1 In this Annex we present the results of our cost and revenue assessment. As discussed in Section 5, our assessment is based on a cohort approach, where we analyse the profitability of BT's retail SFBB business based on the profitability of new customers joining in particular periods. As set out in Section 5, we have identified three periods to assess based on when BT has made significant changes to its SFBB offer. These are the February 2013 offer, the May 2013 offer and the January 2014 offer. We analyse the profitability of each of these offers separately based on the profitability of the cohort of new customers who subscribe to them.

A1.2 This Annex is structured as follows. We first set out the evidence that we have used to carry out our analysis. We then present our assessment of BT's SFBB offers in February 2013. We then consider BT's SFBB offers after 9 May 2013, when it announced that it would offer BT Sport to all existing and new broadband customers at no extra charge. Finally, we analyse BT's SFBB offers from 4 January 2014, when it implemented a number of price changes. We do not consider BT Sport in this analysis, as this is covered in Annex 3.

A1.3 Our analysis shows that BT has a significant positive margin on its SFBB portfolio for each of the three offers, before the cost of BT Sport (which is only relevant to the May 2013 offer and the January 2014 offer) is taken into account. We also calculate the 'headroom' that BT has before BT Sport is included in the cost stack for both the May 2013 and January 2014 offers. By 'headroom', we are referring to the reduction in the monthly margin that would make BT's average SFBB customer unprofitable over the average customer lifetime. This 'headroom' is compared with the costs of BT Sport (calculated in accordance with the methodology set out in Section 6 and set out in detail in Annex 3) to determine whether BT has a positive margin on its May 2013 offer and January 2014 offer overall.

Data sources

A1.4 We have assessed whether it is profitable to offer the SFBB portfolio given the current wholesale charges paid by downstream operators on the basis of the EEO test (as set out in Section 5). In accordance with the cohort approach, it is necessary to identify and estimate the following on a per customer basis:

- downstream revenues;
- wholesale input costs;
- downstream operating costs; and
- one-off / upfront costs.

A1.5 The nature of the items on the SFBB cost stack requires us to draw on several sources. For the majority of revenues and costs, we have used BT's management

accounts. As discussed below, these are reviewed by BT's external auditor as part of its audit of BT Group's consolidated financial statements. The management accounts can also be consolidated to produce the earnings reported for BT Retail/Consumer. We therefore consider them sufficiently reliable to use in our assessment. In some cases we have sourced data from other BT information systems, for example call revenues and costs as these may vary between SFBB and other customers. Where we have used other data sources, we have sought to reconcile these with the information in the management accounts where possible.

A1.6 The data sources we have used are as follows:

i) **Openreach price lists**. These are used for wholesale charges (for example WLR and GEA connection and rental), which are the same for all CPs (on the basis of Equivalence of Inputs).

ii) **BT model**. In the 2010 WLA Statement, we said "we expect BT would need to maintain financial models that contain relevant information on VULA and downstream product costs and prices, and their development over time."[389] The purpose of these models was to ensure that BT complied with its regulatory obligations, in particular not to discriminate unduly, and to ensure there is an appropriate differential between wholesale and retail prices. We requested the most recent version of BT's internal model[390] (the 'BT Model') and have used the information in the BT Model to inform our analysis. We note that BT considered its Model to represent a conservative view of margins earned by its Infinity products due to the fact that (i) the BT Model assessed individual Infinity propositions as well as aggregated fibre propositions and (ii) it allocated some costs that BT did not consider to be strictly incremental to its Infinity products (for example sales and marketing). However, it did not consider that either approach was relevant in a margin squeeze test and that these approaches had been taken to provide a conservative view and a high level of assurance that it was not operating an exclusionary margin squeeze.[391]

iii) **BT management accounts**[392] BT prepares a set of management accounts for each financial year for each of its divisions. BT Consumer's management accounts contain information on a number of revenue and cost items relevant to the SFBB portfolio. We explain the accounts in more detail below.

iv) **BT forecasts**[393] BT produces forecasts, referred to as Bi-Annual Rolling Forecasts (BRFs), of its costs and revenues for each item in its management accounts for the following financial year. The format is similar to the management accounts referenced above. BT has explained that in order to produce the BRFs, the marketing and operational teams produce a volume forecast with price points and product mix. The Consumer Finance team then uses this forecast to generate a revenue and cost forecast. The Finance team also builds a Sales

[389] 2010 WLA Statement, paragraph 8.133. We expected that BT would need to maintain financial models in order to, for example, demonstrate that its pricing structure did not result in an inappropriate differential between wholesale and retail prices over a particular time period. http://stakeholders.ofcom.org.uk/binaries/consultations/wla/statement/WLA_statement.pdf.
[390] BT's response to 1st s26 Notice, Q2, 13 May 2013.
[391] BT's response to 2nd s26 Notice, Q1, 12 June 2013.
[392] BT's response to 3rd s26 Notice, Q19, 24 June 2013.
[393] BT's response to 3rd s26 Notice, Q20, 24 June 2013 and 28 June 2013. We received two forecasts ('BRF1' and 'BRF2') for 2013/14, which we understand were made in September 2012 and February 2013 respectively.

General & Administration (SG&A) plan (i.e. including people costs, development, marketing and other SG&A items). A balance sheet and capital expenditure forecast is also produced.[394]

v) **TalkTalk's analysis of the BT Infinity 1 product**, as presented in its complaint. In its analysis, TalkTalk identified a number of revenue sources and cost items (both recurring and one-off costs) associated with BT Infinity 1 and estimated the revenue/cost of each item. TalkTalk's estimates suggested that the monthly margins per customer were not sufficient to recover the acquisition costs over a reasonable payback period (average customer lifetime).

A1.7 Using these sources of information, we identified the revenue and cost items we required further information on and issued a number of section 26 Notices to BT. The main purpose of the section 26 Notices was to gain an understanding of the data sources, assumptions and methodologies BT used to estimate its costs and revenues of supplying the SFBB portfolio. Following our analysis of BT's responses to the section 26 Notices in conjunction with the data sources set out above, we built a model that calculates whether BT's margins on its superfast broadband portfolio cover its upfront costs over an average customer lifetime. We describe our findings on each cost and revenue item in our detailed assessments of the February 2013, May 2013 and January 2014 offers below.

A1.8 We have also made particular use of BT Consumer's management accounts to assess BT's costs and revenues. In the following sub-section, we explain how the BT Consumer management accounts are prepared and our use of this data source in more detail.

BT Management Accounts

A1.9 BT Consumer[395] produces a set of management accounts that summarise its costs and revenues in order to give the latest view of its financial position.

A1.10 The following diagram, provided to us by BT, illustrates how the management accounts are prepared and how they feed into BT Retail's accounts and BT Group's statutory accounts.

[394] BT's response to 5th s26 Notice, Q3, 10 September 2013.
[395] BT Consumer is a division of BT Retail and provides residential households with voice, broadband and pay-TV services in Great Britain.

Figure A1.1: Process of compiling BT Management Accounts and Statutory Accounts

[✂]

Source: BT[396]

A1.11 As Figure A1.1 shows, the management accounts are compiled on the basis of three main data sources: (i) billing systems; (ii) procurement systems; and (iii) internal cost and revenue systems (internally referred to as [✂]). These systems, which collect data at the level of individual transactions, feed into a 'General Ledger', which sorts similar transactions into 'GL8' codes. The GL8 codes are grouped into revenue and cost categories, which form the basis of the management accounts. The management accounts present the financial information at a consolidated revenue cost/type level (e.g. customer service, marketing).[397] The BT Consumer management accounts form part of the BT Retail accounts which in turn form part of the BT Group statutory accounts.

A1.12 We requested information from BT on the extent to which the management accounts are audited. BT explained that the BT Group auditor (PricewaterhouseCoopers (PwC) in 2012/13) sets the scope, breadth and materiality of its audit in order to be able to form their opinion on BT Group's financial statements. BT explained that, as part of the audit procedures, PwC reviews the BT Consumer management accounts and its constituent parts (e.g. broadband management accounts) on a quarterly basis. This allows PwC to opine that the consolidated BT Group financial statements give a true and fair view of the

[396] BT's response to 5th s26 Notice, Q1,10 September 2013.
[397] BT's response to 5th s26 Notice, Q1,10 September 2013.

state of BT Group's affairs at the end of the financial year and of its profit and cash flows.[398]

A1.13 We also requested a reconciliation of BT's accounts that showed how the management accounts are consolidated at the BT Consumer, BT Retail and BT Group levels. BT publishes BT Group financial statements that include BT Retail revenues, profit and capital expenditure in a separate segmental reporting note.[399] PwC provides an independent audit report on the financial statements of BT Group. BT provided information that showed how the management accounts reconciled with the published financial information. This showed that the earnings reported in each individual management account could be consolidated to produce the earnings reported for BT Retail in BT's published statutory accounts.[400] On this basis, we consider that the data in BT's management accounts is sufficiently reliable to use in our assessment of BT's margins on its SFBB portfolio.

A1.14 BT Consumer prepares a number of separate management accounts. These are prepared mainly along specific product or service lines and are as follows:[401]

- [✂]
- [✂]
- [✂]
- [✂]
- [✂]
- [✂]
- [✂]
- [✂]
- [✂]
- [✂]
- [✂]
- [✂]
- [✂]
- [✂]

A1.15 As explained in Section 5, our analysis includes BT's Infinity broadband products, as well as voice and TV. In Section 6, we explain how we include BT Sport in our

[398] BT's response to 5th s26 Notice, Q4,10 September 2013.
[399] http://btplc.com/Sharesandperformance/Annualreportandreview/pdf/2013_BT_Annual_Report.pdf
[400] BT's response to 5th s26 Notice, Q2,10 September 2013,
BT's response to 6th s26 Notice, Q18, 2 October 2013.
[401] BT letter to Ofcom setting out comments on draft 3rd s26 Notice, 19 June 2013.

analysis (all of which are bundled with BT Infinity). We have therefore used the management accounts for items (i) to (v) in calculating BT's downstream costs (our assessment includes Plusnet for the reasons given below in paragraphs A1.24 to A1.27). We have not used the accounts for items (vi) to (xi) as these are generally not relevant to BT's SFBB propositions.[402] The accounts for items (xii) to (xiv) include a number of cost categories that BT does not allocate in its product-specific management accounts, for example customer services and marketing. We consider that the majority of costs in the SG&A, 'Centre' and 'Other' accounts are scalable in respect of SFBB in the long run, particularly as BT's SFBB products are bundled with voice and TV services. We have therefore included them in our analysis. The methodology we have used to allocate these shared costs is described in Annex 2.

A1.16 We note that in the *Freeserve* case, Ofcom used two primary sources of historical financial data: BT's broadband management accounts and BT's regulatory financial statements. In that case, Ofcom identified the management accounts as being the most appropriate primary data source because they enabled monthly cost trends to be assessed and because they are routinely used by operational management for commercial decision making. However, Ofcom also said that the broadband management accounts may exclude certain costs that are not controllable at a business unit level. Ofcom therefore requested annual and six monthly reconciliations between management and regulatory accounts[403] and, where appropriate, included additional relevant costs.[404]

A1.17 In other investigations,[405] Ofcom has also relied on regulatory financial statements because they are prepared according to well understood and documented principles and have been audited. However, since 2009 BT has no longer been subject to regulatory accounting obligations to report retail activities. As our analysis concerns BT's retail costs, regulatory accounts are not available.[406] We have therefore used the best available sources of information – being primarily BT's management accounts, as our starting point, supplemented by other data as required. The way in which we have done this for each individual revenue or cost item is explained in more detail throughout this Annex.

A1.18 We also note that BT's Model includes a regulatory overhead, which is a percentage uplift applied to controllable retail costs (i.e. it is not applied to costs outside of BT Retail's control such as GEA rental and bandwidth purchased from

---

[402] In any case, including these services would not have a material impact on the analysis as the majority of BT Consumer's business is made up of the three core products of telephone, broadband and TV. In Q3 2013/14, these collectively accounted for 97 per cent of BT Consumer's revenues (Source: Revised KPIs published on 25 February 2014 at http://www.btplc.com/Sharesandperformance/Quarterlyresults/Quarterlyresults.htm)

[403] BT's regulatory accounts are prepared to enable BT to meet its regulatory obligations. These accounts are then used to prepare BT's regulatory financial statements (see http://www.btplc.com/thegroup/RegulatoryandPublicaffairs/Financialstatements/index.htm).

[404] Case CW/00613/04/03 *Investigation into BT's residential broadband pricing* (2010), see Annex 4 of the decision, available at: http://stakeholders.ofcom.org.uk/binaries/enforcement/competition-bulletins/closed-cases/all-closed-cases/cw_613/decision.pdf

[405] For example Case CW/00992/06/08 *Determinations to resolve disputes between each of Cable and Wireless, Level 3, Verizon, Virgin Media and COLT and BT regarding BT's charges for partial private circuits* (2013), available at http://stakeholders.ofcom.org.uk/binaries/consultations/ethernet_services/statement/determination.pdf

[406] BT's response to 2nd s26 Notice, Q7,12 June 2013. The exception to this is in relation to BT's network costs, which are incurred by BT Wholesale (discussed later in this Annex). We have used data sourced from BT's regulatory accounts to estimate these costs.

BT Wholesale). The uplift is calculated based on a reconciliation of data in the management accounts and the regulatory profit & loss statement over the three years up to and including 2008/09.[407] BT explained that this uplift was included as a result of Ofcom's *Freeserve* investigation which, as discussed above, found that relevant costs included in the regulatory accounts were not included in the broadband management accounts. BT noted that it had retained the uplift for the purposes of its internal compliance assurance processes since the end of the *Freeserve* investigation (although BT commented that it considered the mark-up to represent a conservative approach for the purposes of assessing cost recovery, as it considers the relevant incremental costs are already captured outside of the regulatory overheads).[408]

A1.19 Given that the regulatory accounting information is more than four years old, we do not consider it appropriate to include a regulatory overhead for the purposes of a margin squeeze assessment for SFBB, which BT started providing in 2010. Instead, we use information from BT Consumer's management accounts for SG&A, 'Consumer Centre' and 'Other Units' (see Annex 2 for further details), in addition to the product-specific management accounts for broadband, voice and TV. We note that in the *Freeserve* investigation, the majority of additional costs identified in the regulatory accounts related to marketing and advertising, customer call centre costs, central costs (for example the costs of the Retail Leadership Team), and computing and development costs.[409] All of these costs are included in BT Consumer's management accounts for SG&A, Consumer Centre and Other Units.

Time period

A1.20 As discussed above, our assessment of BT's February 2013, May 2013 and January 2014 offers draws on a number of information and data sources. For certain revenue and cost items, deciding the relevant time period is straightforward. In particular, the relevant monthly subscription price and the wholesale charges are simply the prevailing rates during the time periods that we assess.

A1.21 However, many downstream costs are based not on published prices or charges, but on calculations of what those items are likely to have cost BT in the relevant period. In order to calculate these costs, we have used BT's actual costs for the 2012/13 financial year as reported in BT Consumer's 2012/13 management accounts. In relation to the three offers considered in this assessment (February 2013, May 2013 and January 2014), these are the most recent accounts that reconcile to BT Group's statutory accounts and so can be considered sufficiently reliable. Furthermore, we consider that actual data in 2012/13 for most costs will represent a reasonable expectation of costs in the periods that we assess, notwithstanding the rapid growth expected in SFBB.[410] As discussed in Section 5, our analysis of BT Consumer's cost structure shows that the cost stack used to supply SFBB services (other than the costs of BT Sport, which we address in Annex 3) is for the most part identical to that used to supply SBB services, the principal difference being the wholesale inputs purchased.[411] We also note that many of BT's

[407] BT's response to 2nd s26 Notice, Q7,12 June 2013.
[408] BT's response to 2nd s26 Notice, Q7,12 June 2013.
[409] Case CW/00613/04/03 *Investigation into BT's residential broadband pricing* (2010), see Annex 4 of the decision, available at: http://stakeholders.ofcom.org.uk/binaries/enforcement/competition-bulletins/closed-cases/all-closed-cases/cw_613/decision.pdf
[410] BT's financial year ends on 31 March.
[411] BT's response to 5th s26 Notice, Q14, 10 September 2013.

SFBB customers previously purchased SBB from BT, such that the increase in BT's overall retail base is lower than the growth of SFBB customers. This implies that the current level of costs in 2012/13 associated with BT's retail broadband business as a whole is more likely to be representative. Therefore, at the retail level we do not consider that the current costs of provision of SFBB services based on 2012/13 data are unrepresentative over the average customer lifetime. At the network level, any unit cost reductions are likely to be offset by increased bandwidth demand, meaning that the net effect is unclear (see paragraphs A1.95 to A.117). We therefore consider that our analysis based on 2012/13 data represents a reasonable reflection of the costs incurred over the average customer lifetime. In addition, the use of actual data avoids the risk of gaming.

A1.22 However, there are some costs and revenues for which 2012/13 data is not available. In these cases, we have relied on the best available alternative. For example, BT has introduced new product features such as BT Cloud. In order to estimate the costs for these features, we have used BT's forecasts as a starting point and have verified these where possible, making any necessary amendments. In other cases, the information required to check the estimates in BT's Model is very detailed and granular and so we have occasionally relied on data spanning a shorter time period (e.g. over one or two quarters) where that data does not exhibit significant variation and where we do not expect it to differ in other periods. The cost items (other than BT Sport, see Annex 3) for which we have relied on data that does not cover a full year make up a relatively small proportion of the overall cost stack.

A1.23 We note TalkTalk's concern that the data Ofcom has used may be out of date if it does not use customer mix, revenue and cost data after January 2014. In particular, TalkTalk notes that its out of package revenues are reducing at around [✂]% a year.[412] As discussed above (and see also paragraph 5.138), we consider that BT's 2012/13 costs and revenues represent a reasonable reference for BT when setting its broadband prices in February 2013, May 2013 and January 2014. We have assessed BT's margins during this period and found that they cover its LRIC. We consider that this is sufficient for the purposes of the investigation.

Plusnet

A1.24 As Plusnet is wholly owned by BT Group, we consider that the SFBB products sold under the Plusnet brand are relevant to our analysis of BT's SFBB portfolio. BT's Model included estimates of each cost stack item for Plusnet's SFBB products, in addition to the Infinity products. However, given that Plusnet's volumes make up a very small proportion (approximately [✂] per cent) of the SFBB portfolio (see Table A1.3), and are therefore not likely to be material to our overall assessment, we have not applied the same approach as we apply to BT's Infinity products.

A1.25 Instead, we used BT Consumer's management accounts for Plusnet[413] and:

i) where specific costs and revenues could be sourced publicly (e.g. Openreach prices and retail subscription prices) or by using the Plusnet management accounts (e.g. platform costs), we used these as the basis of our analysis;

[412] TalkTalk's August submission (confidential), 28 August 2014, paragraph 5.10.
[413] BT's response to 6th s26 Notice, Q16 to Q17, 3 October 2013.

ii) for other items where we found that BT provided sufficiently reliable estimates for the Infinity products in its Model, we retained their estimates for Plusnet (for example, our assessment of out-of-package data usage revenues for Infinity customers was close to the estimate in BT's Model and so we assumed that BT's estimate of out-of-package data usage revenues for Plusnet customers was also sufficiently reliable);

iii) for shared costs that were not included in BT's Model but which we considered were incremental to BT's provision of fibre products, we applied an uplift that was based on BT Infinity's cost stack. The uplift is calculated by dividing shared costs by direct costs for BT Infinity. We then multiply this percentage by Plusnet's direct costs to derive an estimate for Plusnet's shared costs (this is described in more detail in Annex 2); and

iv) for items where we made significant adjustments to BT's estimates for its Infinity products, we assumed that the actual cost/revenue for Plusnet customers is the same as it is for Infinity customers.

A1.26 We are aware that Plusnet varies its broadband prices by geography. Specifically, in February and May 2013 it charged £7 more for fibre broadband in Market 1 areas.[414] Given that Plusnet fibre subscriptions in Market 1 areas only accounted for around [✂] per cent of Plusnet's total SFBB customer base at the end of 2012/13,[415] we have not adjusted for differences between Market 1 and Markets 2/3 in our analysis.

A1.27 When presenting our assessment of the February 2013, May 2013 and January 2014 offers below, we generally refer to BT's Infinity products rather than Infinity and Plusnet combined because the majority of our investigation focused on the former. However, our overall portfolio estimate of each cost and revenue item includes both Infinity and Plusnet customers.

TV

A1.28 At the end of FY 2012/13, [✂] per cent of BT Infinity customers were 'triple-play', i.e. took voice, broadband and television from BT.[416] In the last quarter of 2012/13,

[414] BT's response to 6th s26 Notice, Q1, 18 October 2013. See also http://www.plus.net/support/broadband/products/low_cost_areas.shtml. The 2010 WBA Statement concluded that there were four separate wholesale geographic markets (the Hull Area, Market 1 (exchanges where only BT was present or forecast to be present), Market 2 (exchanges where two principal operators were present or forecast to be present and exchanges where three principal operators were present or forecast but where BT's share was greater than or equal to 50 per cent) and Market 3 (exchanges where four or more principal operators were present or forecast to be present and exchanges where three principal operators were present or forecast to be present but where BT's share was less than 50 per cent) – 2010 WBA Statement, paragraph 3.194, http://stakeholders.ofcom.org.uk/binaries/consultations/wba/statement/wbastatement.pdf. The 2014 WBA Statement concludes that there are three separate wholesale geographic markets (the Hull Area, Market A (exchanges where there are no more than two principal operators present or forecast to be present) and Market B (exchanges where there are three or more principal operators present or forecast to be present) – 2014 WBA Statement, paragraph 4.211, http://stakeholders.ofcom.org.uk/binaries/consultations/review-wba-markets/statement/WBA-draft-statement.pdf.
An explanation of WBA markets can be found at http://stakeholders.ofcom.org.uk/consultations/wba/.
[415] BT's response to 1st s26 Notice, Q1, 20 May 2013.
[416] BT's response to 1st s26 Notice, Q1, 20 May 2013. This is reasonably constant across each of BT's Infinity products. Plusnet did not provide TV during the period under investigation.

triple-play acquisitions accounted for [✂] per cent of BT's total SFBB acquisitions.[417] Under an EEO test we consider that the EEO must at least be able profitably to replicate BT's retail product portfolio. We consider that BT TV is part of BT's retail product offering.[418] If triple-play packages were excluded, BT could set a negative margin on its triple-play packages and a positive margin on its dual-play packages.

A1.29 We take an additive approach to incorporating BT TV in our analysis, that is, first we estimate the monthly margin and upfront costs for 'dual-play' customers (i.e. those that take voice and broadband) and for triple-play customers we add the costs/revenues of providing TV. We explain in our detailed assessment below how each cost and revenue component for TV is calculated but for the majority of items, we use the 2012/13 management accounts for BT TV. Some cost items are not covered in the management accounts, in which case we requested the relevant breakdown from BT (as sourced from the internal cost systems that are used to construct the management accounts).

A1.30 Having estimated separate cost stacks for dual- and triple-play customers, we then calculate the weighted profitability of the overall SFBB portfolio by using the acquisition percentage weight in the last quarter of 2012/13, as set out in paragraph A1.28.

The February 2013 Offer

A1.31 In this and the following sub-sections, we present our estimates of each item in the cost and revenue stacks for the February 2013, May 2013 and January 2014 offers, explaining the underlying evidence we have relied on and the basis of our calculations. We present the results for BT's SFBB portfolio, including all BT Consumer and Plusnet products and including TV. In relation to the latter, we also explain our estimates of the incremental costs and revenues of taking TV and how these have been calculated.

Introduction

A1.32 In February 2013, BT offered three FTTC broadband products and one FTTP product. Details of these are set out in Table A1.1. Table A1.2 presents the same information for Plusnet's fibre products.

[417] BT's response to 9th s26 Notice, Q5A, 28 February 2014.
[418] As an 'add-on' feature to the core Infinity offerings, BT TV is analogous to out-of package calls, or features such as 'Caller Display' which are also included in our calculations.

Table A1.1: BT Infinity products in 1 February 2013 – 8 May 2013

	Infinity 1	Unlimited Infinity 1	Unlimited Infinity 2	Infinity 3
Price per month	£18.00	£23.00	£26.00	£35.00
Line Rental*	£15.45	£15.45	£15.45	£15.45
Activation fee	£25.00	-	-	-
Download/upload speed (Mbit/s)	38 / 9.5	38 / 9.5	76 / 19	160 / 20
Download limit	40 GB	Unlimited	Unlimited	Unlimited
Calls**	Free fixed evening and weekend	Free fixed evening and weekend	Free fixed evening and weekend	Free fixed evening and weekend
Product features	Unlimited Wi-Fi BT SmartTalk BT Family Protection Home Hub 3 2GB Cloud BT NetProtect Plus Sainsbury voucher (online only)***	Unlimited Wi-Fi BT SmartTalk BT Family Protection Home Hub 3 2GB Cloud BT NetProtect Plus Sainsbury voucher (online only)***	Unlimited Wi-Fi BT SmartTalk BT Family Protection Home Hub 3 50GB Cloud BT NetProtect Plus Sainsbury voucher (online only)***	Unlimited Wi-Fi BT SmartTalk BT Family Protection Home Hub 3 50GB Cloud BT NetProtect Plus Sainsbury voucher (online only)***
Introductory offer****	£9.00 for first 3 months	£16.00 for first 3 months	£20.00 for first 3 months	-

** Customers can take the Line Rental Saver option by paying £129 upfront for 12 months rental (equivalent to £10.75 per month).*
*** From 19 April 2013 all acquisition packages were updated to be weekend calls only. For existing customer offers this change was phased over three phases on 17 May, 28 June and 18 October.*
**** Vouchers were online exclusive offers and were not used throughout the whole period. The voucher amount also varied from month-to-month.*
***** Only available to new customers and not to existing Infinity customers or customers re-grading from ADSL packages.*
Source: BT[419]

[419] BT's response to 6th s26 Notice, Q1, 18 October 2013.

Table A1.2: Plusnet fibre products in 1 February 2013 to 8 May 2013

	Essential Fibre	Essential Fibre and calls	Unlimited Fibre	Unlimited Fibre and Calls
Price per month*	£15.99	£15.99	£19.99	£19.99
Line Rental**	N/A	£13.99	N/A	£13.99
Activation fee***	£50.00	N/A	£50.00	N/A
Maximum Download/upload speed (Mbit/s)	38 / 9.5	38 / 9.5	76 / 19	76 / 19
Download limit	40 GB (unlimited off-peak)	40 GB (unlimited off-peak)	Unlimited	Unlimited
Free Calls	N/A	Free fixed evening and weekend	N/A	Free fixed evening and weekend
Product features	Plusnet Protect	Plusnet Protect	Plusnet Protect	Plusnet Protect
Introductory offer****	6 months half price	6 months half price	6 months half price	6 months half price

** The table shows prices for customers in broadband market 3. They were £7 higher for customers in broadband market 1.*
*** Customers can take the Line Rental Saver option by paying £125.88 upfront for 12 months rental (equivalent to £10.49 per month).*
**** Activation fee is £50 for new customers and £25 for existing customers.*
***** In the period between 7 February and 11 March the introductory offer was 3 months half price.*
Source: BT[420]

A1.33 A BT customer could also have added one of four TV packages – TV Essentials (£5 per month), TV Essentials Extra (£7 per month), TV Unlimited (£12.50 per month) or TV Unlimited Extra (£15 per month) – to any of BT's Infinity products.[421]

A1.34 As discussed above, our analytical framework considers BT's full suite of products, i.e. all Infinity and Plusnet products. We therefore assessed all of BT's FTTC products as well as BT Infinity 3 (which is a FTTP product).

A1.35 Table A1.3 shows BT's total SFBB volumes, including all dual-play and triple-play bundles, at the end of 2012/13 as well as its acquisition volumes in the period Q4 2012/13. As our focus is on new SFBB customers only (as explained in Section 5), we use volume weights based on acquisitions to estimate revenue and costs that reflect the entire SFBB portfolio.[422] This is consistent with a cohort approach as it reflects the portfolio of customers that BT expects to acquire in the given period. For example, BT's Unlimited Infinity 1 proposition is a relatively new product that BT

[420] BT's response to 6th s26 Notice, Q1, 18 October 2013.
[421] BT's response to 9th s26 Notice, Q9, 4 March 2014.
[422] For example, suppose 25 per cent of BT's new SFBB customers purchased Infinity 1 and 75 per cent purchased Infinity 2. If the revenue from Infinity 1 was £10 and the revenue from Infinity 2 was £20, then the weighted portfolio revenue would be £10*0.25+£20*0.75=£17.50.

only started offering at the start of 2012/13. If we were to use BT's total customer base when weighting the individual propositions, we would give very little weight to Unlimited Infinity 1, even though it represented a higher proportion of BT's new acquisitions. That said, we have checked whether our results are sensitive to this assumption by weighting propositions based on existing volumes rather than acquisition volumes. This reduces BT's overall margin but by a relatively small amount (£[✂] for the February 2013 offer).

Table A1.3: BT SFBB Volumes in March 2013 and SFBB Acquisitions in Q4 2012/13

Product	Total Volumes (000s)	Total Volume Weight	Acquisition volumes in Q4 2012/13 (000s)	Acquisition volume weights
Infinity 1	[✂]	[✂]	[✂]	[✂]
Unlimited Infinity 1	[✂]	[✂]	[✂]	[✂]
Infinity 2	[✂]	[✂]	[✂]	[✂]
Infinity 3	[✂]	[✂]	[✂]	[✂]
Plusnet Essential	[✂]	[✂]	[✂]	[✂]
Plusnet Unlimited	[✂]	[✂]	[✂]	[✂]
Total	[✂]		[✂]	

Source: BT[423]

Ongoing revenues applicable to an EEO

A1.36 Ongoing revenues cover the payments BT collects from SFBB subscribers on a monthly basis. These payments include monthly subscription, line rental, out of package call revenues and out of package data usage. We set out our assessment of each of these items below. All revenue assessments exclude VAT (except where otherwise stated).

Monthly subscription

A1.37 Monthly subscription revenues are the payments customers make each month to BT for the supply of a broadband service.

A1.38 The headline monthly subscription prices set out in Table A1.1 and Table A1.2 have been confirmed by BT. It is necessary to adjust the headline price by excluding VAT. [✂].[424] [✂].[425]

A1.39 In addition, in the BT Model, BT adjusted the monthly subscription to take into account the discounts it offers to certain customers, for example in order to persuade them to sign up or stop them from switching – these are known as 'save' offers. To assess BT's calculation of the average monthly subscription price including discounts we requested customer volume data and details of the prices and discounts for each individual BT Infinity offer.[426] This data indicated that

[423] BT's response to 9th s26 Notice, Q4, 21 February 2014.
[424] BT's response to 3rd s26 Notice, Q3, 26 June 2013.
[425] BT's response to 5th s26 Notice, Q24, 18 September 2013.
[426] BT's response to 1st s26 Notice, Q1, 20 May 2013.

approximately [✂] per cent of Infinity 1 customers, [✂] per cent of Unlimited Infinity 1 customers and [✂] per cent of Infinity 2 customers were on 'Save' offers with a discounted monthly subscription price, resulting in average discounts of £[✂], £[✂] and £[✂] respectively. This translates to an average monthly subscription price (i.e. including customers on both discounted and undiscounted offers) of £[✂] for Infinity 1, £[✂] for Unlimited Infinity 1 and £[✂] for Infinity 2 (all excluding VAT).[427]

A1.40 By taking the weighted average of BT's portfolio (including Plusnet), we estimate BT's SFBB average monthly subscription revenue to be £[✂] (excluding VAT).

Line rental

A1.41 Line rental revenues are the payments customers make each month to BT for the supply of a line over which voice and broadband services can be received. Customers receiving copper or fibre-based broadband services must pay for line rental in order to be supplied with a broadband service.[428]

A1.42 BT Infinity customers can pay for line rental either on a monthly basis or as a lump sum for a year in advance by taking the annual line rental saver (LRS) option. For the February offer, annual LRS was priced at £107.50 (excluding VAT).[429] This compares to standard line rental price of £12.88 per month (excluding VAT), working out at £154.50 (excluding VAT) over a year.

A1.43 The monthly line rental price and the price of annual LRS have been confirmed by BT.[430] Therefore, the key parameter in estimating the revenue from line rental is the proportion of Infinity customers that take LRS.

A1.44 BT's Model assumed that [✂] per cent of customers took LRS but this was based on *all* BT customers who purchase line rental (i.e. including all BT customers taking SBB services and those taking only a voice service). Because we are assessing the margins on BT's SFBB portfolio, we considered it more appropriate to use the proportion of Infinity customers who took LRS. BT's data showed that approximately [✂] per cent of Infinity customers took the LRS option as of May 2013.[431] This implies average monthly line rental revenues of £[✂].

A1.45 In TalkTalk's complaint, it assumed that 30 per cent of BT customers choose LRS, although it acknowledged that it had no knowledge of the actual figure.[432]

[427] Given the volumes of customers on other products in the SFBB portfolio, we did not assess the discounts on these products. The volume data we gathered on Plusnet products indicated that Save offers were generally not offered for Plusnet products, while other Infinity products represent a minority of acquisition volumes (less than [✂] per cent).
[428] Virgin Media's cable customers have the option of receiving broadband services without renting a line.
[429] [✂].
[430] BT's response to 6th s26 Notice, Q1, 18 October 2013.
[431] BT's response to 3rd s26 Notice, Q2, 26 June 2013.
[432] TalkTalk complaint (confidential), 13 March 2013, page 91, paragraph 361.

Call revenues

A1.46 Call revenues consist of 'package' fees, 'call bolt-ons' and 'out of package' (OOP) call revenues. Package fees are earned when customers pay extra for a particular call package (e.g. unlimited calls to certain telephone numbers at all times of the week). Bolt-ons[433] are call features that customers can purchase at an additional cost, for example 'Friends and Family International' (which offers lower-cost international calls to landlines and mobiles) and 'International Freedom' (which offers inclusive international telephone calls). OOP revenues are earned when customers make calls outside of those included in their call package. From 1 February 2013 to 19 April 2013, BT's offers all included calls to UK landlines in the evenings and at weekends at no additional charge. After 19 April, the offers were limited to weekends only.[434] OOP revenues therefore relate to UK landline calls at other times of day and other call types, for example mobiles, international numbers and premium-rate numbers.

A1.47 In BT's Model, OOP revenues per customer were estimated at £[✂] per month; for comparison, we noted that in TalkTalk's complaint it estimated these revenues to be £[✂]**[£2.50-£9]** per month (excluding VAT and based on its experience of calling portfolios for customers on similar packages).[435] BT did not include package fees (e.g. upgrades to 'Anytime Calls') or bolt-on revenues (e.g. Friends and Family International) in its estimates.

A1.48 BT's figure for OOP revenues was based on all BT customers taking the 'Unlimited Evening and Weekend Plan' (UEWP) for calls during the first three quarters of 2012/13. The estimate was based on a database ([✂]) which collects the calling records of each of its customer's accounts. BT also supplies [✂] with information on the pence per minute call charges and costs applicable that month (by call type, time of day and package). BT uses the database to understand the revenues, costs and contribution margins associated with each package and to calculate the average profitability of each of its voice packages.[436]

A1.49 We considered that the data source BT used would give an accurate view of package fees, bolt-ons and OOP revenues as it is based on actual data which covers customers taking a BT voice service. However, consistent with our approach to calculating line rental revenues, we considered it more appropriate to base our assessment on revenues for SFBB customers only. We therefore requested that BT provide revenues for Infinity customers only.

A1.50 In addition, we consider that the estimate of call revenues should be based on Infinity customers on all packages and not just UEWP as the former is consistent with our portfolio assessment. This means that we also include package fees (e.g. upgrades to 'Anytime Calls') and revenues from call bolt-ons. BT provided this information for the period Q2 2012/13 – Q2 2013/14 inclusive [✂].[437] We were unable to obtain complete call data for Q1 2012/13 as BT's call cost and revenue data is only readily accessible for a rolling 18 month period.[438] We therefore used

[433] BT refers to these as 'Additional Option Fees'.
[434] The change in call packages to weekend calls only was phased out to existing customers who previously had free evening and weekend calls.
[435] TalkTalk complaint (confidential), 13 March 2013, page 91, paragraph 363.
[436] BT's response to 5th s26 Notice, Q23, 10 September 2013.
[437] BT's response to 9th s26 Notice, Q7, 28 February 2014 and 4 March 2014, BT's response to 11th s26 Notice, Q2, 6 October 2014.
[438] BT letter to Ofcom setting out comments on draft 9th s26 Notice, 12 February 2014.

data for Q2 2012/13 to Q1 2013/14 in order to ensure the analysis was based on data for a full year, such that any seasonal variations in call revenues were averaged out. This showed that the average call revenues per customer month – including package fees and bolt-ons (£[✂]) and OOP revenues (£[✂]) – were £[✂] for Infinity customers.[439] Our estimate for BT's SFBB entire portfolio is £[✂], which takes into account the lower revenues earned on Plusnet products. This is higher than TalkTalk's estimate of £[✂]**[£2.50-£9]**,[440] which is likely to be partly driven by BT charging higher rates for certain local, national and international calls before October 2013.[441]

A1.51 We note TalkTalk's argument that we should adjust our call revenue estimates to reflect the lower usage that an equally efficient operator would enjoy.[442] As discussed in Section 5, we do not consider such an adjustment to be appropriate.

Out of package data usage

A1.52 Revenues from out of package data usage are earned when consumers take an SFBB product with a monthly data usage cap (e.g. 40GB for Infinity 1 and Plusnet Essentials) and exceed their cap. BT charges £5 per incremental 5GB of data which has been used in excess of the limit.

A1.53 The OOP usage revenue provided by BT in its Model was £[✂] per customer month for Infinity 1 customers. BT provided data extracted from its inventory system for April to August 2012 that included total usage charges for Infinity 1 customers and the total volume of Infinity 1 customers.[443] [✂],[444] which was based on BT's data charge and information in Ofcom's 2011 State of the Communications Nation report.[445]

A1.54 We requested updated data for the period April 2012 to December 2013 and found that the monthly average in 2012/13 was £[✂].[446] However, BT noted that it moved to a new reporting system at the beginning of FY2013/14, as it found that the previous reporting system was not performing as expected and was systematically under-calculating revenue. This is reflected in the data, with the average monthly OOP data usage revenues in the first nine months of 2013/14 being £[✂].

A1.55 We concluded that the estimates from the beginning of 2013/14 onwards were likely to be more robust due to the system change. They also better reflect the usage

[439] As BT is unable to provide data that records the call revenues of new acquisitions only (i.e. those acquired from February 2013), our calculation assumes that the calling purchases of new Infinity customers are similar to those of existing Infinity customers. We consider this to be a reasonable assumption as there is no inherent reason why the calling patterns of new customers would be significantly different from existing customers.
[440] TalkTalk complaint (confidential), 13 March 2013, page 91, paragraph 363.
[441] See https://sales.talktalk.co.uk/pricing/preoctober2013, http://www.productsandservices.bt.com/consumerProducts/displayTopic.do?topicId=25502 and BT's Tariff Guide for Residential Customers.
[442] TalkTalk's August submission (confidential), 28 August 2014, paragraph 3.24.
[443] BT's response to 3rd s26 Notice, Q4, 26 June 2013.
[444] TalkTalk complaint (confidential), 13 March 2013, page 91, paragraph 364.
[445] http://media.ofcom.org.uk/2011/11/01/the-state-of-the-communications-nation-2/. This showed that the average fixed broadband user consumed 17GB of data per month. TalkTalk's estimate of £0.50 per customer month was based on the assumption that around 10 per cent of Infinity customers would overstep the 40GB limit (TalkTalk complaint (confidential), 13 March 2013, page 91, paragraph 364).
[446] BT's response to 9th s26 Notice, Q6, 21 February 2014.

during the period under investigation. We have therefore taken the average usage figure for the first nine months of 2013/14 of £[✂] per month.

A1.56 There is no OOP data usage revenue from BT's other Infinity products as these all have unlimited data allowances. Therefore, taking all BT and Plusnet products into account, we estimated that the portfolio revenue from OOP charges was £[✂].

Payment Processing Fees

A1.57 BT charges a Payment Processing Fee (PPF) of £2.00 per month to Infinity customers who do not pay their bills by direct debit or a monthly payment plan.[447]

A1.58 In the BT Model, BT estimated that the average monthly PPF revenue per Infinity customer (i.e. covering both customers who pay PPFs and those who do not) was £[✂]. TalkTalk did not include any PPF revenue in its estimate.

A1.59 In response to our information request, BT explained how it calculated average PPF revenue and submitted a revised estimate of £[✂] for the first quarter of 2013/14 based on data taken from the management accounts (which partly reflected an estimated figure).[448] BT explained its method as follows:

- sum the number of customers taking each calling plan that do not pay their bill by direct debit or a monthly payment plan;
- calculate the percentage of total non- direct debit and monthly payment plan customer population that are on each calling plan; and
- using these percentages apportion the ledgered PPF revenue by calling plan divided by the total calling plan population.[449]

A1.60 We were satisfied that this methodology is appropriate for estimating PPF revenues but we requested BT to provide data for Infinity customers only, based on actual revenues in 2012/13. BT subsequently explained that it does not capture a breakdown of PPF revenues for Infinity customers at the time any such charge is made.[450] Instead, it provided information on 2012/13 PPF volumes for customers currently (at the time of February 2014) taking Infinity.[451] While it is not possible to calculate actual percentages for the relevant period (because not all Infinity customers in February 2014 would have taken SFBB in 2012/13), the data suggested that the proportion of Infinity customers that pay PPF ([✂] in 2012/13) is less than the proportion of BT Consumer's total customer base who pay PPF ([✂] per cent in Q1 2013/14). We therefore adjusted BT's PPF estimate to £[✂] per customer month.

Advertising Revenue

A1.61 Advertising revenue is generated by BT by [a variety of means (e.g. selling inventory on the portals used by customers and premium search engine results)]

[447] For details see: http://www.productsandservices.bt.com/consumerProducts/dynamicmodules/pagecontentfooter/pageContentFooterPopup.jsp?pagecontentfooter_popupid=13408&s_cid=con_FURL_broadbandterms
[448] BT's response to 3rd s26 Notice, Q5, 3 July 2013.
[449] BT's response to 3rd s26 Notice, Q5, 3 July 2013.
[450] BT's response to 9th s26 Notice, Q8, 7 March 2014.
[451] BT's response to 9th s26 Notice, Q8, 7 March 2014.

[✂]. BT also generates revenue from premium search engine results that are shown on its pages (i.e. when people do a web search on BT's site and click on a sponsored result).[452]

A1.62 In order to calculate advertising revenues in its Model, BT divided the forecast advertising revenue for the financial year 2013/14, as set out in its BRF1 2012/13, by the BT broadband base over the same period. This gave a figure of £[✂]. TalkTalk did not include any advertising revenue in its estimate.

A1.63 As set out in paragraph 5.110, we consider it appropriate to base our profitability assessment on actual data where possible. We therefore consider that the actual revenues generated in 2012/13 should be used for the assessment of the February 2013 offer. We divide these revenues by BT's average broadband volumes during the 2012/13 financial year,[453] which gives an advertising revenue per customer month of £[✂] for BT's SFBB portfolio. By dividing total advertising revenues by the total broadband customer base, we are assuming that SFBB and SBB customers generate, on average, the same amount in advertising revenues.[454] Due to the fact that BT's broadband management accounts do not distinguish between SFBB and SBB customers, it was not possible to adjust this figure for SFBB customers specifically. However, given that the figure is a relatively small proportion of the total revenue per subscriber, we consider that it is unlikely that any such adjustment would have been material. We therefore use the figure of £[✂] in our assessment.

Call termination

A1.64 Call termination revenues are earned by operators when a customer from another network calls a customer on the operator's network. In its complaint, TalkTalk estimated this to be around £[✂]**[£0-£1]** per customer month.[455]

A1.65 BT did not include call termination payments in the BT Model because the revenues are retained by BT Wholesale to cover the cost of call termination on the BT network. BT also did not include the associated costs of providing call termination. BT explained that its modelling assesses the risk of margin squeeze in the retail market and so the revenue and associated network termination costs do not form part of its analysis.[456]

A1.66 We agree with BT that call termination payments should not be included on the basis that a WLR operator does not receive these revenues. We note that TalkTalk's estimates are based on its own revenues as an MPF operator. As discussed in Section 5, we consider that an EEO test is appropriate in this case and so we assume that the competitor uses WLR. We have therefore not included the revenues (or costs) associated with call termination in our assessment.

[452] BT's response to 3rd s26 Notice, Q4, 26 June 2013.
[453] We divide by the average rather than year-end volumes to reflect the fact that such revenues are incurred on an ongoing basis. We apply the same rule to other revenues (and costs) that are incurred on an ongoing basis.
[454] Put another way, if SFBB customers make up around 20 per cent of BT's total broadband base then we assume that if BT did not have any SFBB customers then its advertising revenues would be 20 per cent lower.
[455] TalkTalk complaint (confidential), 13 March 2013, page 91, paragraph 364.
[456] BT's response to 3rd s26 Notice, Q16, 4 July 2013.

Average Dual-play Revenue per User

A1.67 Table A1.4 presents our estimates for BT's monthly average revenues per dual-play customer for its SFBB portfolio. Summing all of the above revenues gives a total of £[✂] per month for each dual-play SFBB customer. We explain how we have estimated incremental TV revenues in the following sub-section.

Table A1.4: Average monthly revenues per dual-play customer

Source	Revenue
Subscription	£[✂]
Line Rental	£[✂]
Call revenues	£[✂]
OOP data	£[✂]
PPFs	£[✂]
Advertising	£[✂]
Total	**£[✂]**

TV

A1.68 As discussed in paragraphs A1.28 to A1.30, we include BT TV in our overall assessment by considering the revenues earned above those for SFBB dual-play offers. We do not consider BT Sport in this analysis, as this is covered in Annex 3.

A1.69 BT's Model included two sources of revenue for TV: subscription (i.e. additional monthly fee) and on-demand revenues. The latter are one-off charges paid by customers when they purchase a TV show or film release on-demand.

Subscription revenues

A1.70 In February 2013, BT TV customers could purchase one of four TV packages: Essentials, Essentials Extra, Unlimited and Unlimited Extra for £5, £7, £12.50 and £15 extra a month respectively (including VAT).[457] The main difference between the packages is the amount of included content (which increases as the customer moves to a more expensive package). We calculated the weighted subscription revenue by using the volume of acquisitions on each TV package in Q4 2012/13. We weight revenues using acquisition volumes for the same reasons discussed in paragraph A1.35 as these are also relevant to TV, given that Essentials Extra and Unlimited Extra were only made available in January 2013 (meaning that using total volumes as weights would understate the importance of the two 'Extra' products to new customers). On this basis, the split was [✂] per cent for Essentials, [✂] per

[457] BT's response to 9th s26 Notice, Q9, 4 March 2014.

cent for Essentials Extra, [✂] per cent for Unlimited and [✂] per cent for Unlimited Extra.[458]

A1.71 BT's estimate of subscription revenues from TV customers in its Model was £[✂] in the first 18 months and £[✂] after the first 18 months. This was due to an initial offer that BT made to new Essential customers between 1 February 2013 and 6 June 2013 where TV Essential was 'free' for the first 18 months.[459] The £[✂] was calculated by excluding VAT and assuming that [✂] per cent of customers stayed with BT after the initial offer expired. BT explained that it did not have data to enable it to measure on-going purchases of the package and so it made an assumption of [✂] per cent.[460] As we are unable to obtain data from BT to verify the proportion of triple-play acquisitions that drop BT TV after the initial 18 month contract period, it has not been possible to estimate this proportion with accuracy. We therefore carried out a sensitivity test by assuming that [✂] per cent of TV customers stayed with BT after 18 months (this is the most conservative assumption that can be applied – see paragraph A1.155 below) and found that the effect is not material to the final result. We therefore apply BT's assumption in our calculations.

A1.72 BT's Model was based only on the profitability of the TV Essentials product and did not incorporate revenues from customers taking the Essentials Extra, Unlimited or Unlimited Extra product. BT explained that the February 2013 version of its internal governance model included TV Essentials due to the 'free for 18 months' offer it had until June 2013. However, it did not consider that other TV propositions should be included because they were supplied as a distinct 'bolt-on', the pricing of which is taken on a stand-alone basis reflecting unit economics and expected overall impact of TV profitability.[461]

A1.73 However, as discussed in Section 5 our assessment includes the provision of TV and so we consider that TV revenues and costs should reflect the fact that new customers took up a range of TV offers. We have therefore adjusted revenues to include customers on all packages, using the weights discussed in paragraph A1.70. This results in an estimated TV subscription revenue of £[✂] in the first 18 months of the customer's lifetime and £[✂] thereafter (assuming [✂] per cent of customers stay with BT after the initial discount expires).

On-demand revenues

A1.74 BT's estimate of on-demand revenues was calculated by taking the total on-demand revenues reported in the 2012/13 BT Vision accounts and dividing it by the average TV base in 2012/13.[462] This gave a figure of £[✂] per customer month.

A1.75 We consider this approach to be appropriate but we note that BT did not apply a [✂] per cent reduction to this item after 18 months to adjust for the fact that [✂] per cent of triple-play customers will not keep BT TV after that period. Doing so means that on-demand revenues were £[✂] per customer month for the first 18 months and £[✂] thereafter.

[458] BT's response to 9th s26 Notice, Q9, 4 March 2014.
[459] BT's response to 9th s26 Notice, Q9, 4 March 2014.
[460] BT's response to 6th s26 Notice, Q3, 18 October 2013.
[461] BT's response to 9th s26 Notice, Q9, 4 March 2014.
[462] BT's response to 6th s26 Notice, Q3, 18 October 2013.

A1.76 Table A1.5 presents our estimates for BT's monthly average revenues per customer for TV.

Table A1.5: Average monthly TV revenues per triple-play customer

Source	Revenue (first 18 months)	Revenue (after 18 months)
Subscription	£[✂]	£[✂]
On-demand	£[✂]	£[✂]
Total	**£[✂]**	**£[✂]**

Average Revenue per SFBB User

A1.77 The two previous sub-sections summarise our estimates of average revenue for BT's dual-play SFBB customers (£[✂]) and the average incremental revenue generated from taking TV (£[✂] in the first 18 months and £[✂] after 18 months). The total revenue generated by the average BT triple-play customer is £[✂] in the first 18 months and £[✂] thereafter (the average triple-play revenue for the whole portfolio is slightly higher than the summation of triple-play revenues and portfolio dual-play revenues because Plusnet, which is included in the latter, does not provide TV).

A1.78 By weighting dual- and triple-play revenues by their relative acquisition weights (i.e. [✂] per cent and [✂] per cent as presented in paragraph A1.28), we obtain the average revenue for BT's SFBB portfolio, which is £[✂] in the first 18 months and £[✂] thereafter.

Ongoing Wholesale Costs applicable to an EEO

A1.79 In order to carry out an EEO margin squeeze test, our analysis assesses whether BT would be profitable in the supply of the SFBB portfolio, given the charges it pays for the wholesale inputs and retail prices it has set. We have therefore first assessed the regulated wholesale inputs BT purchases, followed by the other downstream costs it incurs to supply the SFBB portfolio.

Upstream inputs

A1.80 BT incurs two main wholesale charges, payable to Openreach, when providing a customer with an SFBB product: GEA and WLR. These prices are published and are consistent with the figures in the BT Model for the month of February 2013.[463]

[463] See Openreach prices here: http://www.openreach.co.uk/orpg/home/products/pricing/loadProductPriceDetails.do?data=yzq%2FQaGYa3hVgsB2ZYfjHxzfISuq3px%2FWFtgATP2kPRZ6rNZujnCs99NbIKJZPD9hXYmiijxH6wr%0ACQm97GZMyQ%3D%3D

A1.81 TalkTalk's estimates included MPF rental rather than WLR in its calculation, because the former is the relevant wholesale product for LLU operators.[464] However, as set out in Section 5, given that our assessment is based on an EEO test, we consider it appropriate to use BT's costs. The use of this input makes the margin test harder for BT to pass as the price of WLR (£8.23) was higher than the price of MPF (£7.28) in February 2013.[465] We note that there are additional costs for an MPF provider associated with unbundling the BT exchange (for example power costs, and renting space in the exchange), but TalkTalk's estimates of these amount to £[✂]**[£0-£2]** per customer month,[466] which still results in a lower cost than using WLR.

A1.82 The wholesale costs for BT's SFBB portfolio are set out in Table A1.6. The price of GEA depends on the specific product purchased (particularly the downstream and upstream connection speed) and so we have calculated the average GEA cost per customer by using the acquisition weights in Table A1.3.

Table A1.6: Regulated wholesale costs per SFBB customer

Source	Cost
GEA	£[✂]
WLR	£8.23
Total	**£[✂]**

Ongoing Downstream Costs applicable to an EEO

Voice costs

A1.83 The voice costs included in BT's Model are based on WLR and are covered by two broad categories: variable costs and overheads. The Model included database outputs for the first three quarters of 2012/13, which showed average monthly revenues (the OOP revenues discussed above) and costs associated with customers on different call packages (for example one worksheet had data on customers taking unlimited anytime calls and another had data on customers taking unlimited evening and weekend calls).[467] These outputs are based on [✂] discussed in paragraph A1.48. The call costs were split as follows:

---

and here:
http://www.openreach.co.uk/orpg/home/products/pricing/loadProductPriceDetails.do?data=vZC%2BGHIiu80GtUKWLu%2BtzAfqMZEuYNVwUnHGezzgOd1UNeIS4WkJBRh6z%2FRUAIt8maxtgrEro1A7%0Aw5V8nzAZpQ%3D%3D

[464] TalkTalk complaint (confidential), 13 March 2013, page 89, paragraph 353.

[465] http://www.openreach.co.uk/orpg/home/products/pricing/loadProductPriceDetails.do?data=Wk%2B2hSVL2knF5F0Ve%2F1N8zj9r0QWsRm3Qpmu5FcPTOYlMnGHsqdC0vzO163bJmh34D91D7M0q8u%2FlISgtIFAKw%3D%3D

[466] TalkTalk complaint (confidential), 13 March 2013, page 91, paragraph 367 and pages 92 and 93, paragraph 371. Also TalkTalk's response to informal information request (confidential), 11 April 2013, page 4. The estimate of £[✂]**[£0-£2]** is based on TalkTalk's estimates for power and running costs (£[✂]) **[£0-£1]**and space (£[✂]) **[£0-£1]**.

[467] BT's response to 2nd s26 Notice, Q6, 12 June 2013.

- Product Unit Costs (PUCs) – these are charges associated with the conveyance of calls across the BT network ([✂]);[468]

- Payments to Other Licensed Operators (POLOs) – these are call termination payments to other licensed operators;

- 'Uncostable Calls'[469] – these refer to call types that are not costed within BT's database (such as 0844/0871, premium rate and directory enquiries calls) and so BT assumes that costs equal revenues; and

- Retail call overheads, such as marketing and sales, general management, finance and billing and bad debt.[470]

A1.84 The initial estimates provided by BT were for all customers on the UEWP. This suggested that the average variable cost (including PUCs, POLOs and Uncostable Calls) per customer month was £[✂] while call overheads were £[✂] per month. The latter (the call overheads) is sourced from BT's regulatory accounting information[471] for LRIC unit retail call costs.[472] These costs are expressed in pence per minute and they are multiplied by the relevant volume of minutes for each call type.[473] As we have allocated shared costs using BT's SG&A, Consumer Centre and 'Other Unit' accounts, we do not include this overhead as it would result in double-counting. Further details of our approach can be found in Annex 2.

A1.85 For the variable costs, we requested BT to provide data just for its Infinity customers. BT provided data on call costs for all BT Infinity customers in Q2 2012/13 to Q1 2013/14 (not just Infinity UEWP customers).[474] This showed that the cost per Infinity customer was £[✂] per month. As we carry out a portfolio assessment, we consider it appropriate to base our estimates on BT's overall Infinity portfolio. This is consistent with our approach to estimating call revenues.

A1.86 We compared BT's figures with those submitted by TalkTalk in its complaint, which included interconnection costs (these cover payments for termination of calls on other operators' networks, i.e. POLOs). TalkTalk estimated the monthly cost of interconnection by considering its own data for the 2012 calendar year. This suggested that the average monthly interconnection cost per customer was around £[✂]**[£0-£8]** per month.[475]

A1.87 TalkTalk's complaint also included the costs incurred by an operator using MPF access to provide the functionality needed to offer voice services, such as the costs of an MSAN, ports, tie cable, a test head, space/power and voice servers. TalkTalk

[468] [✂].
[469] BT referred to this as 'Uncostable Revenue' but we use the term 'Uncostable Calls' to avoid any confusion in using the term 'revenue' as a cost item.
[470] BT's response to 2nd s26 Notice, Q6, 12 June 2013.
[471] Currently known as ASPIRE, to be replaced by REFINE.
[472] Several unit costs are needed for this calculation as the unit costs are different for local PSTN calls, national PSTN calls, fixed-to-mobile calls and international calls.
[473] BT's response to 3rd s26 Notice, Q19, 28 June 2013.
[474] BT's response to 9th s26 Notice, Q7, 28 February 2014 and 4 March 2014.
[475] TalkTalk complaint (confidential), 13 March 2013, page 92, paragraph 367. TalkTalk initially estimated interconnection costs in its complaint to be £[✂]**[£0-£8]** but it revised this to £[✂]**[£0-£8**] in response to informal information request (confidential), 11 April 2013, Q2a, page 3.

estimated these recurring costs to be £[✂]**[£0-£2]** per customer per month.[476] The table below provides a breakdown of the voice costs provided by BT and TalkTalk.

Table A1.7: Voice cost breakdown based on BT and TalkTalk data

Cost	BT	TalkTalk
PUCs	£[✂]	-
POLOs	£[✂]	£[✂] **[£0-£8]**
Uncostable Calls	£[✂]	-
Voice costs	-	£[✂] **[£0-£2]**
Total	**£**[✂]	**£**[✂] **[£0-£5]**

A1.88 In aggregate terms, therefore, monthly voice costs are higher under BT's data (**[£0-£8]**) than TalkTalk's (£[✂]**[£0-£8]**). However, there is significant variation within these estimates. Specifically, the majority of TalkTalk's costs are accounted for by POLOs ([✂]**[60-100]** per cent), whereas in BT's Model this accounts for a relatively minor proportion ([✂] per cent).

A1.89 Some of the items are not directly comparable due to the fact that BT's estimates are based on a WLR operator and TalkTalk's are based on an LLU operator. However, the two estimates of POLOs provide useful comparators.

A1.90 We checked BT's PUC and POLO calculations using the data in BT's management accounts for voice. These accounts report total charges paid for both POLOs and PUCs each year as £[✂] and £[✂] respectively in 2012/13. If these figures are divided by the average number of voice customers during the year (around [✂]),[477] the resulting cost per customer for POLOs and PUCs respectively is £[✂] to £[✂] [478] and £[✂].

A1.91 The average PUC per customer is similar to the figure in Table A1.7 while the average cost per customer for POLOs is within the range given in the management accounts, though noticeably lower than TalkTalk's estimate. There are two potential reasons why TalkTalk incurs higher POLO costs than BT. The first is that TalkTalk's customers may make significantly more off-net calls than BT's customers (this would likely be during evenings and weekends, given BT earns higher OOP revenues than TalkTalk). The second is that BT Retail provides voice by purchasing wholesale calls from BT Wholesale, which may not incur as many off-net charges as TalkTalk when routing calls.

[476] TalkTalk complaint (confidential), 13 March 2013, page 93, paragraph 371.
[477] BT's response to 9th s26 Notice, Q16, 21 February 2014.
[478] A range is given due to BT's reporting of POLOs in its management accounts. The total reported cost of POLOs in 2012/13 was £[✂], giving an average customer cost of £[✂] per month. However, [✂].

Source: BT's response to 7th s26 Notice, Q44, 13 December 2013. We have therefore presented a range of £[✂] - £[✂] .

A1.92 We note TalkTalk's comment that BT is able to terminate a lot of traffic on net at zero 'cost' as it has dominance in the wholesale fixed analogue exchanges lines (WFAEL) market. TalkTalk argued that as this cannot be replicated by another operator, a scale rival that is using WLR will not be able to terminate traffic on net, meaning that it will incur a standard BT fixed termination rate/charge. TalkTalk said that this charge should be included in our estimate of call costs or, alternatively, Ofcom should include the costs to BT of providing call termination.[479] We do not consider this adjustment to be necessary as a rival operator using WLR could purchase a wholesale call service from BT Wholesale, in which case it would not incur a termination charge to other WLR-based lines.[480] The costs that the rival operator would incur, for example charges for call conveyance and termination charges to Virgin and LLU operators, are included in the cost stack under PUCs and POLOs.

A1.93 We also note that as an LLU operator TalkTalk does not incur the same level of PUCs as BT and it pays £0.95 less in wholesale charges (i.e. the difference between Openreach's MPF and WLR charges). These additional charges offset TalkTalk's higher POLO costs. Furthermore, as an MPF operator, TalkTalk earns termination revenues that a WLR operator does not. In any case, given that our assessment is based on an EEO test, we consider it appropriate to base our analysis on BT Consumer's costs. We note that in a supplementary submission on call costs, TalkTalk made a similar argument: "*the calling patterns of BT Infinity customers may be different from those across the whole of TalkTalk's consumer base; it would therefore be appropriate to use the calling patterns of BT customers…when deriving results of the margin squeeze assessment.*"[481]

A1.94 We base our calculations on BT's data on Infinity POLOs and PUCs. In terms of Uncostable Calls, we note BT's assumption that certain calls incur no margins (e.g. premium rate numbers and directory enquiries). In the absence of any further available information, we have not made any adjustments to this figure. Our estimate of call costs for BT's entire SFBB portfolio is £[✂]. This is slightly lower than BT's figure of £[✂] referred to above due to Plusnet's lower call costs.

Network costs

Bandwidth

A1.95 Bandwidth costs cover the costs incurred to provide broadband subscribers with the necessary bandwidth for internet access. By including these in our cost stack, we assume that bandwidth costs vary with a customer's usage because higher usage requires the EEO to build more capacity into its network.

A1.96 Figure A1.2 provides a stylised overview of the key building blocks in the BT network used to deliver broadband services. The access network connects the customer's premises to the BT local exchange. This access is covered by the wholesale costs discussed in paragraphs A1.80 to A1.81 (i.e. WLR and GEA). The

[479] TalkTalk's August submission (confidential), 28 August 2014, paragraph 5.7.
[480] BT's response to 12th s26 Notice, Q2, 16 October 2014
[481] TalkTalk supplementary submission (non-confidential), , 11 April 2013, page 3.

bandwidth costs therefore refer to the backhaul and core network. These represent the connection between the local exchange and the internet.

Figure A1.2: Illustration of Network

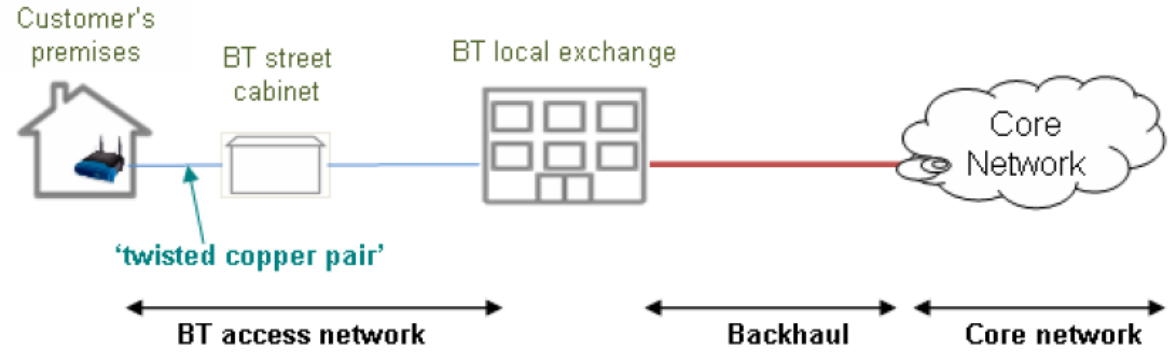

A1.97 For BT, the backhaul and core network costs are incurred by BT Wholesale rather than BT Consumer. Due to the structure of BT Group, BT Consumer purchases WBA products (for example Wholesale Broadband Connect (WBC) and Wholesale Broadband Managed Connect (WBMC)) from BT Wholesale in order to provide broadband services. However, BT is not dominant in the provision of wholesale broadband access in those areas where the majority of SFBB connections are available.[482] We therefore estimate the network costs incurred by BT Wholesale rather than using the prices it charges for WBA products.

A1.98 We estimate network costs by considering the costs of providing the capacity required to meet usage in the peak or busy hour. The formula we adopt is as follows:

Network cost per user = Average capacity available to each user[483] * Unit bandwidth cost

A1.99 Average capacity available to each user represents the total capacity available divided by the number of users that share it. For example, if the total capacity was 1000Mbit/s and this was shared by 2,000 users then the average capacity available to each user would be 0.5Mbit/s. The level of capacity reflects usage, in particular peak demand.[484] It is therefore reflective of the amount of bandwidth, and consequent cost, for which an operator will need to provision. The unit bandwidth cost is the cost of supplying bandwidth of 1Mbit/s to a customer per month.

A1.100 The same methodology was also used to estimate bandwidth costs by both BT in its Model and TalkTalk in its complaint. BT estimated the Infinity 1 network cost to be £[✂] per customer, per month.[485] By contrast, TalkTalk estimated the Infinity 1 network cost to be £[✂]**[£2-£10]** per customer, per month (it also added a further

[482] 2010 WBA Statement, paragraph 4.91, http://stakeholders.ofcom.org.uk/binaries/consultations/wba/statement/wbastatement.pdf, and 2014 WBA Statement, paragraph 5.98 (referring to Market B), http://stakeholders.ofcom.org.uk/binaries/consultations/review-wba-markets/statement/WBA-Statement.pdf
[483] Sometimes referred to as peak throughput or peak usage.
[484] BT's response on 12 June 2013 to 2nd s26 Notice, Q3
[485] BT's response to 2nd s26 Notice, Q3, 12 June 2013.

£[✂]**[£0-£1]** for peering).[486] The difference was driven by TalkTalk's assumed average capacity available to each user ([✂]**[0-350]** Kbit/s against [✂] Kbit/s) and unit cost (£[✂]**[£0-£50]** per Mbit/s per month[487] against £[✂] per Mbit/s per month). With regard to the former, TalkTalk considered this to be a conservative assumption as it noted that its own SFBB subscribers used [✂]**[100-1000]** Kbit/s.[488] We note that BT's assumption for average capacity available to each user was significantly higher for its other Infinity products ([✂] Kbit/s for Unlimited Infinity 1 and 2 customers and [✂] Kbit/s for Infinity 3 customers) than for the Infinity 1 product. BT's estimates were also based on average capacity volumes during the three year period between 2012/13 and 2014/15, meaning they were based on both actual and forecast data.

A1.101 In the two sub-sections below, we set out the estimates of average capacity data and unit bandwidth costs we have used in our assessment.

BT average capacity data

A1.102 As set out in Table A1.8, BT provided annual average capacity available to each user figures for each Infinity product from 2010/11 to 2014/15. This includes actuals from 2010/11 to 2012/13 and forecasts for 2013/14 and 2014/15. It shows that, as one might expect, bandwidth usage for unlimited products is higher than for the capped Infinity 1 product.

Table A1.8: BT average capacity available to each end user (Kbit/s) for 2010/11 to 2014/15

Product	2010/11	2011/12	2012/13	2013/14	2014/15
Infinity 1	[✂]	[✂]	[✂]	[✂]	[✂]
Unlimited Infinity 1	[✂]	[✂]	[✂]	[✂]	[✂]
Infinity 2 – 80/20	[✂]	[✂]	[✂]	[✂]	[✂]
FTTP	[✂]	[✂]	[✂]	[✂]	[✂]

Source: BT[489]

A1.103 We have used the 2012/13 average capacity available to each user figures to calculate network costs. Although we note that capacity is forecast to increase over time, this will be counteracted by a reduction in the unit bandwidth cost (see paragraph A1.116). As we do not have forecasts of BT's unit bandwidth costs for 2013/14 onwards that are consistent with BT's regulatory accounts, the net effect of the changes is unclear. We therefore use 2012/13 bandwidth costs as our estimate over the average customer lifetime, based on 2012/13 average capacity data and 2012/13 unit bandwidth costs (as discussed further below).

[486] TalkTalk complaint (confidential), 13 March 2013, page 93, paragraph 371.
[487] It took a mid-point of £[✂] **[£10-£50]** when estimating the cost. TalkTalk complaint (confidential), 13 March 2013, page 93, paragraph 371.
[488] TalkTalk complaint (confidential), 13 March 2013, page 93, paragraph 371.
[489] BT's response to 2nd s26 Notice, Q3, 12 June 2013,
BT's response to 6th s26 Notice, Q9,18 October 2013.

BT's unit bandwidth costs

A1.104 In order to calculate unit bandwidth costs, we requested detailed information from BT on the source data, assumptions and methodology used to calculate its unit cost estimate of £[✂] per Mbit/s per month. BT submitted the sections of its 21C forecast model which are relevant to the calculation of the unit costs of the upstream services used by its consumer SFBB products.[490] The BT 21C forecast model is produced by BT TSO and BT Group Finance and is used to calculate unit costs of 21C network elements and the services (e.g. copper and fibre broadband) that use them. BT explained that costs in the 21C model include allocations of common and overhead costs, meaning that the model is prepared on a FAC basis.[491] The model showed that the unit cost estimate of £[✂] per Mbit/s per month was based on 2014/15 forecast data; the comparable figure for 2012/13 was £[✂] per Mbit/s per month.

A1.105 We subsequently reviewed data that BT submitted in response to an information request in relation to the WBA market review, which included a unit bandwidth cost estimate of £[✂] per Mbit/s per month for WBC in Market 3 in 2012/13.[492] We would not expect there to be a significant difference in the unit bandwidth cost for fibre broadband and WBC (i.e. copper broadband) in Market 3 (which accounts for around 80 per cent of UK households),[493] as traffic from both services mostly uses the same backhaul and core network. We therefore requested that BT provide a reconciliation of this data with the estimate in its 21C model.

A1.106 BT explained that its 21C forecast model is a 'bottom-up' build, with a number of costs sourced from BT TSO data and forecast volume information. The key cost drivers in the 21C model are 'Network Elements' that are relevant to the provision of fibre broadband services. By contrast, the estimate for Market 3 WBC is sourced from BT's regulatory accounting system,[494] which allocates costs to Plant Groups and then to a set of network components used to supply services (such as broadband).[495] In order to provide a comparison between the two cost estimates, BT created a relationship between the Network Elements in the 21C model and Plant Groups in the regulatory accounting system.[496]

A1.107 The comparison between the 21C model and WBC data sourced from BT's regulatory accounting system showed that the former allocates costs over a broader range of services, giving a lower unit cost. Whereas BT's regulatory accounting system allocates the majority of costs to copper broadband, the 21C model allocates costs to both copper and fibre broadband, as well as other relevant services such as Ethernet. [✂]. BT therefore considered the 21C model to be an appropriate basis on which to assess the margin squeeze issues relevant to this investigation. It also argued that it based its estimate on forecast costs for 2014/15 as it expected a reasonable level of utilisation of the relevant network assets would be achieved by that point. BT said that Ofcom should consider the forward-looking

[490] BT's response to 4th s26 Notice, Q6, 22 July 2013,
BT's response to 5th s26 Notice, Q26, 10 September 2013 and 18 September 2013.
[491] BT's response to 10th s26 Notice, Q3, 24 April 2014.
[492] BT's response to 7th s135 Notice for WBA market review, Q4, 2 December 2013,
BT's response to 10th s26 Notice, Q1, 24 April 2014.
[493] See 2010 WBA Statement, paragraph 1.7 http://stakeholders.ofcom.org.uk/consultations/wba/
[494] Currently known as ASPIRE, to be replaced by REFINE.
[495] See BT's Detailed Attribution Methods for further details.
[496] BT's response to 10th s26 Notice, Q3, 30 April 2014.

costs BT will face in providing bandwidth.[497] BT restated its position on these points in its August submission.[498]

A1.108 Whilst we note the issues raised by BT in relation to the cost allocations used in its regulatory accounting system, our preferred approach to estimating costs is to use data that feeds into audited financial statements wherever possible, as it reconciles to BT's total costs (as discussed in paragraphs A1.12 and A1.17). By contrast, it is extremely difficult to verify whether all relevant costs have been included in an alternative bottom-up cost model. Furthermore, as discussed above, we do not consider that the bandwidth costs for SFBB should be materially different to copper broadband (or indeed any other network service) in Market 3, given that the services use the same core network elements and assets. We also note that although some of the allocations used in BT's regulatory accounting system may overstate unit bandwidth costs (for the reasons given by BT), there are other assumptions that may understate costs, for example [✂].[499]

A1.109 As discussed in paragraph 5.110, we prefer to calculate costs using actual 2012/13 data rather than forecasts (as suggested by BT) where possible, given that the actual data is more reliable, less subject to uncertainty and less sensitive to assumptions about future costs and volumes. Given the concerns we have in using BT's 21C model to estimate 2012/13 costs, we do not consider it appropriate to use the 21C forecasts to estimate unit bandwidth costs in 2013/14 and 2014/15.

A1.110 In order to estimate bandwidth costs for our margin squeeze assessment, we therefore use the unit bandwidth cost of WBC in Market 3, as reported by BT's regulatory accounting system. In addition to the above wholesale cost of £[✂] per Mbit/s per month, it is necessary to include an EOI cost, which is Openreach's charge for backhaul links (such as Ethernet Backhaul Direct). BT provided a unit EOI charge of £[✂] per Mbit/s per month for WBC in Market 3.[500] This is estimated by taking the total Openreach charge for BT Wholesale and allocating a proportion of the total charge to WBC in Market 3. The latter is then divided by bandwidth volumes in Market 3. This is the same process by which BT estimates EOI charges for WBC in Markets 1 and 2, which are published in BT's 2012/13 Regulatory Financial Statements.[501] Adding the wholesale cost and EOI charge for WBC in Market 3 gives a total unit bandwidth cost of £[✂] per Mbit/s per month.

A1.111 However, this unit bandwidth cost is calculated on a FAC basis. As explained in Section 4, the relevant cost standard in this margin squeeze test is LRIC. We have estimated the LRIC unit bandwidth cost by applying a LRIC:FAC ratio of 75.3 per cent to the wholesale bandwidth cost (it does not apply to the EOI cost as this comprises charges paid to Openreach). This is based on the LRIC:FAC ratios for WBC bandwidth costs in Markets 1 and 2, as reported in BT's 2012/13 RFS.[502] Applying this ratio gives a LRIC unit bandwidth cost of £[✂] per Mbit/s per month.

---

[497] BT's response to 10th s26 Notice, Q3, 30 April 2014.
[498] BT's August submission (confidential), 6 August 2014, paragraph 2.33.
[499] BT's response to 10th s26 Notice, Q1, 24 April 2014.
[500] BT's response to 10th s26 Notice, Q2, 30 April 2014.
[501] See BT's Current Cost Financial Statements for 2013, pages 113 and 120.
[502] See BT's Current Cost Financial Statements for 2013, pages 113 and 120. The LRIC:FAC ratio should be the same for WBC bandwidth in Market 3 as it is in Markets 1 and 2 due to the fact that it uses the same cost components and therefore the same cost volume relationships to covert FAC into LRIC (for further details, see BT's 'Long Run Incremental Cost model: Relationships and Parameters

A1.112 In its August submission, TalkTalk argued that bandwidth costs are variable in the long run with respect to bandwidth and so the assumption that 25% of costs are fixed is implausible.[503] Whilst the majority of bandwidth costs may be variable in the long-run, they are very unlikely to be fully scalable (in the sense of, for example, a 100 per cent rise in bandwidth resulting in a 100% increase in LRIC). This is because both backhaul and core network costs include a number of fixed and common costs, such as duct, fibre, buildings and certain equipment costs (for example switches). These will be incurred when bandwidth volumes in the backhaul and core networks are very small but, as volumes increase, the fixed and common costs will not increase by the same proportion (i.e. the cost-volume elasticity will be less than 1). We therefore believe that the LRIC:FAC ratio of 75.3 per cent is a reasonable input to calculate the LRIC of bandwidth.

A1.113 TalkTalk also said that Ofcom should be wary of using any data from the RFS regarding how much of certain costs are fixed and common, as BT has a strong incentive to categorise many costs are common.[504] As we explain below, our estimate of BT's bandwidth cost is similar, or indeed higher than that of TalkTalk, suggesting that it is not out of line with external benchmarks.

A1.114 In its 2013/14 Regulatory Financial Statements, BT restated its unit bandwidth costs for the WBC markets in the 2012/13 financial year to take into account the allocation issues discussed in paragraph A1.107.[505] We also note BT's concern that the unit bandwidth cost for fibre broadband is lower than the unit bandwidth cost for WBC in Market 3 as BT only requires Ethernet Backhaul Direct (EBD) for SFBB backhaul, whereas SBB uses Ethernet Access Direct (EAD). BT suggested that the unit bandwidth cost for SFBB is approximately £[✂] lower per month per subscriber.[506]

A1.115 Given that BT passes our margin squeeze test using the bandwidth costs sourced from its original 2012/13 regulatory accounts, we have not made any adjustments to our unit bandwidth cost assessment. However, we note that our estimate is more likely to overstate than understate costs given the points raised by BT in paragraph A1.107 above and the fact that the 2012/13 costs have been restated downwards.

A1.116 We note that our estimate of BT's unit bandwidth cost is similar to that used by TalkTalk in its complaint (£[✂]**[£10-£50]** per Mbit/s per month), though in response to a follow-up section 26 Notice TalkTalk presented a lower estimate of around £[✂]**[£0-£50]** per Mbit/s per month in 2011/12 and £[✂]**[£0-£50]** per Mbit/s per month in 2012/13.[507] This suggests that the unit cost estimate we use in our analysis is subject to uncertainty and is likely to fall over time.[508] We have therefore presented two sensitivities in Section 7, one which assumes a similar unit

---

2013' at http://www.btplc.com/Thegroup/RegulatoryandPublicaffairs/Financialstatements/2013/index.htm).

[503] TalkTalk's August submission (confidential), 28 August 2014, paragraph 3.40.

[504] TalkTalk's August submission (confidential), 28 August 2014, paragraph 3.41.

[505] http://www.btplc.com/Thegroup/RegulatoryandPublicaffairs/Financialstatements/2014/CurrentCost2014.pdf

[506] BT's August submission (confidential), 6 August 2014, paragraph 2.33.

[507] TalkTalk response to 1st s26 Notice, 29 July 2013.

[508] The fact that unit bandwidth costs have been falling is also consistent with BT's 2011/12 and 2012/13 estimates for WBC bandwidth in Market 3 (BT's response to 10th s26 Notice, Q1, 24 April 2014).

bandwidth cost to TalkTalk in 2012/13 and another which uses the restated 2012/13 unit cost (as given in the 2013/14 RFS).

A1.117 Table A1.9 presents our bandwidth cost estimates for BT's Infinity products, using the formula described in paragraph A1.98. The SFBB portfolio estimate of £[✂] is calculated by weighting the product costs by their acquisition volumes (as discussed in paragraph A1.35).

Table A1.9: Monthly Bandwidth cost per SFBB customer

Product	Peak usage (Kbit/s)	Unit cost (£ per Mbit/s)	Total cost (Peak usage*Unit Cost)
Infinity 1	[✂]	£[✂]	£[✂]
Unlimited Infinity 1	[✂]	£[✂]	£[✂]
Infinity 2	[✂]	£[✂]	£[✂]
FTTP	[✂]	£[✂]	£[✂]
Overall portfolio (weighted)			**£[✂]**

BT Wholesale Rental

A1.118 The BT Model includes a monthly cost of £[✂] for 'bandwidth rental', which is incurred by BT Wholesale. These are the SG&A and product line costs of providing wholesale level network services that support the provision of retail services to end users.[509] As we estimate bandwidth costs using BT's RFS data, which already include SG&A costs, these are already accounted for in the bandwidth costs discussed above, and we therefore do not include them as a separate item in our cost stack.[510]

Platforms

A1.119 BT's Model included a separate entry for 'Platform Costs' which included two main components: (1) a charge for using the BT Global Services internet platform for peering and transiting,[511] and; (2) internal payments to BT TSO to manage broadband platforms.[512] BT estimated this to be £[✂] per customer month (similar to TalkTalk's estimate of £[✂]**[£0-£1]** for peering)[513] based on information in its 2011/12 management accounts.[514] We consider this relevant to a LRIC assessment as BT would likely incur lower peering and transit costs if it did not have a fibre customer base (because it would have fewer customers using the internet).

[509] BT's response to 2nd s26 Notice, Q5, 12 June 2013.
[510] We note that this cost item was erroneously included in our assessment of BT's margins in Ofcom's Provisional Decision.
[511] Peering and transiting are two ways in which ISPs connect to content providers and other ISPs. Peering is a mutual agreement between two network providers to exchange traffic. It is often free but in some circumstances, payment can be made from one party to another. Transit is where the ISP pays for bandwidth from a provider of core internet connectivity. It is often used to connect to services hosted in other countries.
[512] BT's response to 2nd s26 Notice, Q4, 12 June 2013.
[513] TalkTalk complaint (confidential), 13 March 2013, page 93, paragraph 371.
[514] BT's response to 2nd s26 Notice, Q4, 12 June 2013.

A1.120 We have amended BT's estimate to reflect the 2012/13 broadband management accounts and we have also allocated platform costs in proportion to the bandwidth used by different customers as the volume and spend on peering and transiting is likely to be driven by the capacity of the link. Our estimate is derived by calculating the total bandwidth usage of BT's SFBB and SBB customers (we have the average throughput in 2012/13 for each of BT's broadband products and we multiply each one by the relevant customer volumes) and then estimating a unit platform cost, which is calculated by dividing the platform costs reported in the 2012/13 management accounts by BT's total customer throughput. We then estimate platform costs for each of BT's broadband products (e.g. Infinity 1, Infinity 2 etc) by multiplying the unit platform cost by the total bandwidth usage for each product. The average customer cost per product is then derived by dividing platform costs by the 2012/13 average product volumes. We divide by the average rather than year-end volumes to reflect the fact that such costs are incurred on an ongoing basis. By taking the weighted average of BT's portfolio (including Plusnet), we estimate BT's SFBB platform costs to be £[✂] per customer month.

Portal fees

A1.121 BT has an agreement with a third party to provide BT's broadband customers with a bespoke BT-branded online portal and value added services. BT pays a fee for that service, and estimated the monthly customer cost to be £[✂], which is calculated by dividing the actual cost in the 2011/12 management accounts by the BT broadband base.[515] We have replicated the calculation using the 2012/13 management accounts, which suggests a slightly lower monthly cost per customer of £[✂]. This is driven by similar total costs being spread over a larger broadband base.

Product Features

A1.122 As shown in Table A1.1, BT's Infinity offers include a number of additional services, including NetProtect Plus, Wi-Fi, BT Cloud Storage and BT SmartTalk.

NetProtect Plus

A1.123 BT's Model included a cost per customer of £[✂] for anti-virus software. BT explained that its estimate was derived by taking the monthly charge by McAfee and multiplying by [✂] per cent to reflect the planning assumption of the number of customers taking up the service.[516] We requested a copy of the Software Licence Agreement between McAfee and BT. The Pricing Schedule in the Agreement shows that BT incurs a £[✂] monthly licence fee for each user that takes the product with BT Infinity.[517]

A1.124 We also obtained the actual numbers of BT customers taking NetProtect Plus since its launch in January 2010.[518] On the basis of the uptake figures in February 2013, BT's assumption of [✂] per cent appears to be overstated by more than [✂] percentage points, suggesting a monthly customer cost of less than £[✂] across BT's SFBB portfolio. We therefore assume that BT incurs, on average, a cost of £[✂] per customer per month for NetProtect Plus.

[515] BT's response to 2nd s26 Notice, Q4, 12 June 2013.
[516] BT's response to 2nd s26 Notice, Q3, 12 June 2013.
[517] BT's response to 4th s26 Notice, Q8, 22 July 2013.
[518] BT's response to 4th s26 Notice, Q8, 22 July 2013.

A1.125 We note that TalkTalk estimated the cost of NetProtect to be £1.12 per customer per month.[519] TalkTalk used the retail price of McAfee Internet Security 2013 at the online BT Shop,[520] which at the time of the complaint was £38.74. This equates to £2.69 per customer month (excluding VAT). TalkTalk further assumed that BT earned a 50 per cent margin on sales and that it received a volume discount of 20 per cent off the wholesale cost, implying a cost of £1.12.[521] As shown above, this represents [✂].

Wi-Fi

A1.126 With regards to Wi-Fi access, BT explained that there are two Wi-Fi networks that combine to offer the BT Wi-Fi proposition – the 'FON network' and the 'Premium Hotspots network.' BT stated that the FON network is provided by means of the public service set identifiers (SSIDs) emitted from BT Home Hubs. BT explained that there were no incremental costs associated with providing Infinity customers access to this Wi-Fi network as both the Home Hub costs and the incremental costs of the chipset, including bandwidth, were included elsewhere in the BT Model (see bandwidth costs above and the Home Hub costs in paragraphs A1.198 to A1.199).[522]

A1.127 In terms of the Premium Hotspots network, BT explained that it consisted of Wi-Fi hotspots set up in public places and commercial premises. BT also explained that at the start of 2013/14, the total monthly data traffic consumed at its hotspots was [✂], [✂] per cent of which ([✂]) was generated by BT's consumer broadband customers. BT estimated the incremental cost of this data to be [✂]p per MB, meaning that the monthly cost per customer is [✂]).[523] We requested further information on the incremental cost and BT provided total forecast spend on Wi-Fi during the period 2013/14 to 2015/16.[524] In addition to forecast data usage, BT provided information on the following costs:

- network monitoring and maintenance;
- backhaul;
- platform and site assets depreciation;
- customer service;
- SG&A; and
- development.

A1.128 In 2013/14, BT expected the total cost per megabyte (i.e. the above costs divided by data usage) to be [✂]p and it expected this to fall by more than half in the subsequent two years (giving an average of [✂]p over the three year period). We concluded that BT's calculations were reasonable (even when SG&A costs are

[519] TalkTalk's response to informal information request (confidential), 11 April 2013, Q3.
[520] http://www.shop.bt.com/
[521] TalkTalk's response to informal information request (confidential), 11 April 2013, pages 5 and 6.
[522] BT's response to 2nd s26 Notice, Q9, 12 June 2013.
[523] BT's response to 2nd s26 Notice, Q9, 12 June 2013.
[524] BT's response to 5th s26 Notice, Q20, 10 September 2013.

included) but asked for 2012/13 data.[525] This showed that the cost per MB per month was [✂]p, which implies a monthly cost per costumer of [✂]p ([✂]).

A1.129 [✂].[526][✂].

A1.130 We note that, TalkTalk estimated BT's Wi-Fi cost per customer to be £0.76.[527] This was based on BT's Openzone Regular Access products.[528] It considered the price of BT's three Wi-Fi products (Original, Together and Global) and assumed that BT earns a 65 per cent margin on sales. It also assumed that 75 per cent of BT Infinity 1 customers do not make use of unlimited Wi-Fi, 17 per cent used it as Openzone Original, 6 per cent used it as Openzone Together and 2 per cent used it as Openzone Global. This gave a monthly customer cost of £0.76.[529] As shown above, this is [✂] of the actual cost that BT incurs in providing Wi-Fi to its SFBB customers.

BT Cloud

A1.131 BT Cloud allows customers to back up securely, access and share their data using a variety of different devices. BT's estimate of the costs of BT Cloud in its Model was £[✂] per month for Infinity 1 customers and £[✂] for Infinity 2 and Infinity 3 customers. This gave an overall portfolio cost of £[✂] per customer month. BT explained that this figure was based on a monthly licence cost of £[✂] and a storage cost of £[✂]/£[✂] per GB per month for users on a 2GB/50GB storage service.[530] BT assumed that Infinity 1 customers would store [✂] on average (given an available storage of 2GB) and that Infinity 2/3 customers would store [✂] on average (given an available storage of 50GB). BT multiplied the sum of the licence and storage costs by [✂] per cent, which is a forecast assumption of the proportion of Infinity customers using BT Cloud.[531]

A1.132 In order to verify these estimates, BT provided us with a copy of its contract price schedule with [✂], its cloud storage provider, which confirmed the monthly licence cost of £[✂].[532] The contract also set out details of the following costs that are payable by BT for the storage facility:

- [✂];
- [✂] ;
- [✂] ;
- [✂] ; and
- [✂] .

[525] BT's response to 7th s26 Notice, Q37, 13 December 2013.
[526] BT's response to 2nd s26 Notice, Q9, 12 June 2013.
[527] TalkTalk's response to informal information request (confidential), 11 April 2013, page 7.
[528] See http://www.btwifi.co.uk/
[529] TalkTalk's response to informal information request (confidential), 11 April 2013, Q3.
[530] The storage cost was based on BT forecast assumptions as the product was only launched on 1 February 2013. BT's response to 2nd s26 Notice, Q3, 12 June 2013.
[531] BT's response to 4th s26 Notice, Q7, 22 July 2013.
[532] BT's response to 4th s26 Notice, Q7, 22 July 2013.

A1.133 BT's storage cost estimates of £[✂] per GB per month included [✂] as well as the cost of [✂]. We noted that three cost items set out in the price schedule with [✂] were omitted: [✂]. BT explained that these were fixed/one-off costs and as such were excluded as part of a LRIC-based estimate.[533] We note from the pricing schedule that each of these costs are incurred regardless of the number of customers or capacity used. In any case, including all three items in the BT Cloud cost stack makes no difference to the cost per user per month and so their exclusion has no impact on the analysis. The reason for this is that the costs are relatively small when spread over the number of BT Cloud users.

A1.134 Due to the fact that BT Cloud was a relatively new service, launched on 1 February 2013, it was necessary for BT to make assumptions about customer take-up and the amount of data stored. BT provided forecasts of BT Cloud costs and capacity for the first three years and took the average over this period to derive their estimate.[534] BT also provided us with data on BT Cloud usage, which showed that as of March 2013, a significantly smaller proportion than BT's forecast of [✂] per cent (around [✂] per cent) of Infinity 1 and Infinity 2 customers had BT Cloud accounts. However, we note that the uptake of BT Cloud has been rapidly increasing since and so BT's assumptions may not be unreasonable as consumers become more familiar with the product.

A1.135 Given the fact that it is a new product, and as such we have minimal actual data to rely on, we do not consider there is any basis to amend BT's cost estimates. We therefore assume an average cost of £[✂] per SFBB customer per month, which is a weighted averaged across BT's portfolio based on a cost of £[✂] for Infinity 1 customers and £[✂] for Infinity 2/3 customers. This is slightly higher than the estimate in BT's Model due to the different weights used for the Infinity propositions (BT weighted the Infinity offers by total volumes rather than acquisitions). We note that TalkTalk's estimate of the cost of BT Cloud was very similar at £0.06 per month, which was benchmarked using the price of Sky Drive and Apple iCloud (other providers' cloud products).[535]

SmartTalk

A1.136 BT SmartTalk is an application that uses a Wi-Fi or mobile data connection to make calls that are charged to the registered BT account holder (i.e. any calls made using the application will cost the same as calls from the customer's home phone rather than using mobile rates or minutes).[536] The product was launched in January 2013.[537]

[533] BT's response to 6th s26 Notice, Q10, 18 October 2013.
[534] BT's response to 4th s26 Notice, Q7, 22 July 2013
[535] TalkTalk's response to informal information request (confidential), 11 April 2013 Q3.
[536] See: http://bt.custhelp.com/app/answers/detail/a_id/40735/c/345,6293,6294/session/L3RpbWUvMTM5OTA1NzQwNS9zaWQvTDVqKklnVGw%3D
[537] BT's response to 5th s26 Notice, Q17, 10 September 2013.

A1.137 BT's Model did not include the costs of SmartTalk. BT explained that calls made using the SmartTalk app function are treated as if made from the customer's home calling plan, meaning that they are included in the voice costs discussed above.[538]

A1.138 In terms of the sunk costs of developing the application, BT said that these amounted to £[✂] in 2012/13, all of which was capitalised.[539] As these are covered in BT's SG&A management accounts (under Development), we cover this in our allocation of Development spend (see Annex 2). We note that TalkTalk estimated the cost of SmartTalk to be £0.10 per customer per month, though it acknowledged that it had no relevant information to determine the cost and therefore assumed it to be low.[540]

Shared Costs

A1.139 BT incurs some shared costs (such as customer service, development and marketing) in the supply of its broadband, voice and TV services. Unlike other categories in the cost stack, such as network costs or calls costs, shared costs are not directly allocated to individual products. However, we consider that many of these costs are used to provide SFBB services and should be included in our assessment of downstream costs.

A1.140 BT's Model included an allocation of some shared costs, specifically, marketing, customer service and development, in the cost stacks of SFBB products. BT's Model also included an 'overhead' for calls and line rental ongoing costs, and a 'regulatory overhead' for both ongoing and upfront costs. These are described in detail in Annex 2.

A1.141 Following our assessment of BT's estimates of shared costs we concluded that its Model had underestimated these costs, for example by not including any allocations to voice (even though Infinity is a dual-play offer and BT included direct call costs and revenues elsewhere in its Model). Also, instead of using BT's overhead estimates, which are sourced from its regulatory accounting system (and in the case of the regulatory overhead is based on data from more than four years ago, as discussed in paragraph A1.17), we took the shared costs recorded in the management accounts and allocated a proportion to the SFBB portfolio cost stack. We consider that this approach is appropriate because it is based on up-to-date information (2012/13) and it is consistent with the approach used to estimate other items in the cost stack (e.g. platform costs and portal fees).

A1.142 We follow a two-step approach to estimate the shared costs that should be included in our LRIC estimates:

- first, identify the shared costs we consider to be incremental to SFBB; and
- second, identify appropriate methods to allocate incremental shared costs to the SFBB cost stack. In particular, we identify whether the relevant cost is an upfront

[538] BT's response to 5th s26 Notice, Q17, 10 September 2013.
[539] BT's response to 5th s26 Notice, Q17, 10 September 2013.
[540] TalkTalk's response to informal information request (confidential), 11 April 2013, Q3.

cost associated with customer acquisition or an ongoing cost. We also estimate whether the cost is likely to vary in response to the number of customers or to the number of products taken.

A1.143 Our approach is set out in detail in Annex 2. Table A1.10 provides a summary of our estimates for BT's SFBB portfolio, in addition to a brief description of each item.

Table A1.10: Monthly Shared Cost per dual-play customer

Cost	Ofcom Estimate	Description
Customer Service	£[✂]	Covers call centre costs incurred to provide customers with technical support, deal with queries relating to billing, complaints and value added services.
Development	£[✂]	Activities that support the evolution of BT Consumer's product portfolios (e.g. development of new projects, increasing product functionality and improving customer experience).
Total Labour Cost - Management	£[✂]	Cost of labour in relation to management functions for BT Consumer.
Billing and Bad Debt	£[✂]	Costs of billing customers for BT Consumer products and services and of any bad debt incurred in serving the customer base.
Customer Retention	£[✂]	Costs incurred to reduce the number of existing subscribers switching to other operators.
Non-campaign Marketing	£[✂]	Non-campaign specific costs – mostly overheads such as CRM, data, retainer fees, PR, and BT.com development.
Customer service overheads	£[✂]	Overhead costs of customer services operations, including cost of building rent and energy, 3rd party support to systems and applications, employee travel and subsistence, incentives and recruitment.
Accommodation	£[✂]	Costs of all property/accommodation used by BT Consumer personnel.
Other internal/external spend/recoveries	£[✂]	All other overheads within BT Consumer not covered elsewhere.
People related costs	£[✂]	Costs of providing staff with travel and subsistence, bonuses, training etc.
IT spend	£[✂]	Costs of software licences and support systems used across BT Consumer products.
Marketing platform spend	£[✂]	Cost of operating and maintaining the system which holds customer marketing data.
BT TSO – direct and indirect	£[✂]	Direct and indirect charges to BT Consumer by BT TSO (see Annex 2 for more details).
Plusnet overhead	£[✂]	As BT did not include a number of SG&A costs in either of its estimates for BT Consumer and Plusnet, we estimate these costs for Plusnet by applying an uplift on its direct costs. The uplift is based on BT Consumer's SFBB direct costs as a proportion of SG&A costs (see Annex 2 for more details).
Total	£[✂]	

Other ongoing costs

A1.144 TalkTalk included three additional categories of monthly costs: costs associated with using the GEA product (£[✂]**[£0-£1]** per customer month), event charges

(£[✂]**[£0-£1]** per customer month) and customer retention (£[✂]**[£0-£5]**) per customer month.[541]

GEA Costs

A1.145 TalkTalk stated that its estimate of GEA costs included the following items:[542]

- the cost of installing a GEA cable link;
- the costs of installing and maintaining an Ethernet switch;
- space within the BT exchange; and
- power and other running costs for exchange-related assets.

A1.146 BT's Model did not include these costs as a specific item. However, BT explained that the above GEA costs were nevertheless included in the Model as follows:

- GEA Cable link charges are included in the cost of BT Wholesale Rental (as confirmed in Table A1.10);
- Ethernet charges and power and space relating to bandwidth equipment are included in the network costs (see Annex 2); and
- power and space costs relating to exchange equipment are included under variable call costs and the Openreach WLR price.[543]

A1.147 Given that these items are included under other costs, we do not estimate them separately as they are already accounted for.

Event charges

A1.148 Event charges relate to unscheduled 'events' which occur and cause TalkTalk to incur costs but which cannot be recovered from the customer, for example, special fault investigations (a charge which is payable to Openreach). TalkTalk stated that these charges are incurred irregularly but are relatively high; it therefore modelled them as a small charge against each customer per month.[544]

A1.149 With regard to event charges, BT submitted cost estimates relating to three specific charges, which we verified against BT Openreach price lists.[545]

- BT Expedites – a charge payable to Openreach (£180 in February 2013)[546] to carry out the customer installation more quickly than is standard;

[541] TalkTalk complaint (confidential), 13 March 2013, page 92, paragraphs 367 to 368 and page 94, paragraphs 373 to 374.
[542] TalkTalk's response to informal information request (confidential), 11 April 2013, Q2.
[543] BT's response to 3rd s26 Notice, Q17 and Q18, 3 July 2013.
[544] TalkTalk email to Ofcom on event charges, 9 April 2013.
[545] BT's response to 3rd s26 Notice, Q13, Q17 and Q18, 3 July 2013.
[546] Available at:
http://www.openreach.co.uk/orpg/home/products/pricing/loadProductPriceDetails.do?data=yzq%2FQaGYa3hVgsB2ZYfjHxzfISuq3px%2FWFtgATP2kPRZ6rNZujnCs99NbIKJZPD9hXYmiijxH6wr%0ACQm97GZMyQ%3D%3D

- BT Abortive Visits – a charge payable to Openreach (£85 in February 2013) when an engineer visit is unsuccessful due to not being able to access the customer property; and

- Modify upstream order charges – there is a £10 charge payable to Openreach to cancel or modify a customer order.[547]

A1.150 A key difference between BT's and TalkTalk's approach to modelling event charges is that TalkTalk included them as monthly charges while BT included them as one-off acquisition costs. In practice, there is little difference between the two estimates as BT's upfront event charges are equivalent to around £[✂] per customer month[548] (compared to £[✂]**[£0-£1]** for TalkTalk)[549] over [✂] years (the average customer lifetime we estimate for BT customers). Given that the event charges identified by BT are incurred around the time of customer acquisition, we adopt BT's approach and include event charges as one-off costs. Our assessment of these costs is set out at paragraphs A1.205 to A1.206.

A1.151 In terms of the special fault investigations identified by TalkTalk, BT explained that it offers a 'Broadband Boost' product (supplied by Openreach), which is a chargeable service to investigate special faults. If the fault is on the customer premises, BT recovers the cost from the consumer and if the fault is not on the customer premises, BT Retail obtains a credit from Openreach.[550] We have therefore not included this in the cost stack as BT Consumer incurs no costs under either scenario.

Customer retention

A1.152 TalkTalk's estimate of customer retention costs included ad-hoc discounts, contract renewals (both administration and discounts), customer mail-outs, call outs and the cost of a new router "*every four years or so.*"[551] There was no specific 'customer retention' item in BT's Model but most of the retention costs referred to by TalkTalk are included under other items, for example BT's subscription price already includes 'save' offers (see paragraph A1.39) and its marketing and labour costs include retention activity such as call outs and mail-outs (our estimate of these is presented in Table A1.10; see Annex 2 for further details). The main cost that is not included is for a replacement router. BT provided data on the number of routers provided to existing broadband customers in 2012/13 as well as the total cost of these.[552] This showed that the average monthly cost per customer for replacement routers was £[✂]. We therefore include this in our downstream cost stack.

<u>Total ongoing costs per dual-play user</u>

A1.153 Table A1.11 presents our estimates of ongoing downstream costs for BT's dual-play SFBB portfolio. Summing all of the above downstream costs gives a total of £[✂]

[547] See: http://www.openreach.co.uk/orpg/home/products/pricing/loadProductPriceDetails.do?data=yzq%2FQaGYa3hVgsB2ZYfjHxzfISuq3px%2FWFtgATP2kPRZ6rNZujnCs99NbIKJZPD9hXYmiijxH6wr%0ACQm97GZMyQ%3D%3D

[548] This calculation does not include any discounting.

[549] TalkTalk complaint (confidential), 13 March 2013, page 92, paragraph 369.

[550] BT's response to 3rd s26 Notice, Q17 and Q18, 3 July 2013.

[551] TalkTalk complaint (confidential), 13 March 2013, page 94, paragraph 373.

[552] BT's response to 9th s26 Notice, Q17, 28 February 2014.

per month for each dual-play SFBB customer. We explain how we have estimated incremental ongoing BT TV costs in the following sub-section.

Table A1.11: Average monthly costs per dual-play customer

Source	Cost
Voice	£[✂]
Network Costs	£[✂]
Platforms	£[✂]
Portal fees	£[✂]
Product Features	£[✂]
SG&A	£[✂]
Replacement router	£[✂]
Total	**£**[✂]

TV

A1.154 As discussed in paragraphs A1.28 to A1.30, we include BT TV in our overall assessment by considering the costs incurred in addition to those for SFBB.

A1.155 BT's Model included five specific cost items for TV Essentials: content; bandwidth/network; licences; CPE; and fixed costs. We discuss each of these in turn below. In addition, we note that although BT discounted its subscription revenues by [✂] per cent after 18 months (due to a proportion of triple-play customers not keeping BT TV, see paragraph A1.71), it did not do the same for costs. As we are interested in the cost per TV subscriber in the February 2013 cohort, we apply this adjustment to each of the cost items below. We have carried out a sensitivity on this assumption to ensure that our final result is not dependent on it. Due to the fact that the incremental costs of TV are higher than BT's revenues, BT's overall SFBB margins increase as the percentage of triple-play customers that stop taking TV goes up. Therefore, assuming that there is no churn after 18 months is the most conservative assumption we can apply against BT. If we apply this assumption, the impact on BT's overall SFBB margins is [✂] after 18 months. It is therefore not material to our analysis overall.

A1.156 In relation to BT TV costs, there are some items in our analysis where we deviate from our usual approach of using actual 2012/13 data and instead use information in BT's most recent (at the time it was requested) forecasts in the BRF for 2013/14. The reason for this is that two of BT's TV products, Essentials Extra and Unlimited Extra, only became available in January 2013[553] and so there is no full 2012/13 data for these. We therefore use 2012/13 data where the cost is invariant to the specific BT TV package and we use 2013/14 forecasts where the cost varies by package.

[553] BT's response to 9th s26 Notice, Q9, 4 March 2014.

Content

A1.157 Content cost includes the cost of providing TV content (excluding BT Sport) to BT Vision subscribers, both on-demand and on a subscription basis. BT estimated this to be £[✂] for subscribers on the Essentials package based on the expected cost in 2013/14 divided by the average TV customer base during that year.[554]

A1.158 As this cost varies with TV package (due to the fact that the amount of content increases as the package becomes more expensive), we use 2013/14 forecasts to estimate content costs. We note that this results in a higher cost than if we use 2012/13 data due to the fact that BT expects to spend more on content in 2013/14. Furthermore, as we did with revenues (see paragraph A1.73), we base our cost estimates on all new BT TV subscribers (i.e. including those on the Unlimited and Extra packages) rather than just those on the Essentials package.

A1.159 Using information from the BT TV management accounts, we estimate the cost of TV content to be £[✂] per customer month using the same methodology as BT (i.e. divide total costs by number of subscribers and weight them based on package acquisitions, as outlined in paragraph A1.70).[555] After 18 months, the cost per customer month falls to £[✂] (assuming that [✂] per cent of customers stop taking BT TV). This is higher than BT's estimate because we have included the costs for the Unlimited and Extra packages, which offer more content.

Bandwidth/network

A1.160 The network costs of providing IPTV include interconnect, circuits and BT Wholesale's TV Connect product.[556] BT estimated this to be £[✂] per TV customer, which was again based on the Essentials package and was calculated by taking the network costs forecast for 2013/14, multiplying it by the percentage of video-on-demand views accounted for by Essentials customers and dividing that figure by the average number of Essentials subscribers forecast for 2013/14.

A1.161 As with content costs, we also use BT's 2013/14 forecasts due to the fact that network costs vary by TV package (e.g. Unlimited customers tend to consume more bandwidth than Essentials customers) but we have again adjusted the estimate so that it includes Unlimited and Extra subscribers.[557] On this basis, our estimate of the network cost per TV subscriber is £[✂] per month for the first 18 months and £[✂] per month thereafter (as with content costs, using 2013/14 forecast data results in higher costs than using 2012/13 actual data). This is higher than BT's estimate because we have included the costs for Unlimited subscribers, who account for the majority of viewing via IPTV.

Licences

A1.162 These include the cost of ongoing licences for boxes and platforms. BT estimated this to be £[✂] by dividing 2013/14 forecast costs by 2013/14 forecast volumes. We

[554] BT's response to 6th s26 Notice, Q3, 18 October 2013.
[555] BT's response to 6th s26 Notice, Q3, 18 October 2013,
BT's response to 9th s26 Notice, Q10, 28 February 2014.
[556] As explained in paragraph A3.191, these costs would also include some costs in relation to distributing BT Sport OTT.
[557] BT's response to 6th s26 Notice, Q3, 18 October 2013,
BT's response to 9th s26 Notice, Q10, 28 February 2014.

have adjusted the figure to reflect 2012/13 costs (provided in the BT Vision management accounts), giving an estimate of £[✂] per customer month for the first 18 months and £[✂] thereafter.[558] Unlike content and bandwidth, licence costs do not vary depending on the TV package that customers choose.

Customer premises equipment (CPE)

A1.163 Ongoing CPE costs consist of refurbishment (the cost of refurbishing boxes that are reported faulty), powerline and CPE replacement.[559] BT estimated the ongoing CPE cost to be £[✂] by dividing the 2013/14 forecast costs by 2013/14 forecast volumes.[560] As with licences, we have adjusted this by using 2012/13 costs and this gives an estimate of £[✂] per customer month for the first 18 months and £[✂] thereafter. CPE costs do not vary depending on the TV package that customers choose.

Fixed costs

A1.164 BT's definition[561] of fixed costs included: [562]

- fixed licences (those that do not vary with the number of users on a service);
- production;
- platforms ([✂] for on-going support and maintenance of TV delivery platforms);
- DTT (costs of using [✂] to deliver FreeView services to all TV customers);
- YouView (costs of contribution in line with the YouView shareholder agreement); and
- fixed network costs (related to multicast delivery).

A1.165 BT estimated these to be £[✂] using the same methodology as for licences and CPE. Our adjusted estimate using 2013/14 forecasts is £[✂] per customer month for the first 18 months and £[✂] thereafter.[563] Again, our estimate is higher because we include all TV packages in our assessment.

A1.166 We use forecast data in our analysis for two reasons. Firstly, [✂] and so we consider this should be reflected by using forecast data that takes this into account. Secondly, we note that [✂]. BT explained that this is due to [✂].[564] We consider

[558] BT's response to 6th s26 Notice, Q3, 18 October 2013,
BT's response to 9th s26 Notice, Q10, 28 February 2014.
[559] BT's response to 6th s26 Notice, Q3, 18 October 2013,
BT's response to 9th s26 Notice, Q10, 28 February 2014.
[560] BT's response to 6th s26 Notice, Q3, 18 October 2013,
BT's response to 9th s26 Notice, Q10, 28 February 2014.
[561] BT's response to 6th s26 Notice, Q3, 18 October 2013,
BT's response to 9th s26 Notice, Q10, 28 February 2014.
[562] As explained in paragraph A3.188, this would also include the costs of distributing BT Sport via multicast.
[563] BT's response to 6th s26 Notice, Q3, 18 October 2013,
BT's response to 9th s26 Notice, Q10, 28 February 2014.
[564] BT's response to 9th s26 Notice, Q10, 28 February 2014.

that both of these events would result in material cost reductions for BT and so we use forecast data to reflect this.

Additional SG&A Costs

A1.167 In relation to SG&A costs, we estimate that SFBB customers that take BT TV incur an additional cost of £[✂] per customer month. Details of our allocation methodology are set out in Annex 2.

A1.168 Table A1.12 resents our estimates for BT's monthly weighted costs for BT TV. Summing all of the above downstream BT TV costs gives an additional cost of £[✂] and £[✂] per month (for the first 18 months and after 18 months respectively) for each BT TV customer.

Table A1.12: Average monthly BT TV costs per triple-play customer

Source	Cost (first 18 months)	Cost (after 18 months)
Content	£[✂]	£[✂]
Network	£[✂]	£[✂]
Licenses	£[✂]	£[✂]
CPE	£[✂]	£[✂]
Fixed costs	£[✂]	£[✂]
Additional SG&A	£[✂]	£[✂]
Total	**£[✂]**	**£[✂]**

Average on-going cost per SFBB User

A1.169 The two previous sub-sections summarise our estimates of average ongoing downstream costs for BT's dual-play SFBB customers (£[✂]) and the average incremental cost incurred in supplying BT TV (£[✂] in the first 18 months and £[✂] thereafter). The total cost of supplying the average triple-play customer is £[✂] / £[✂]. This estimate adjusts for Plusnet's inclusion in the portfolio. As Plusnet does not provide TV, the average triple-play cost for the whole portfolio is slightly less than the summation of portfolio dual-play and BT TV costs.

A1.170 By weighting dual- and triple-play revenues by their relative acquisition weights (i.e. [✂] per cent and [✂] per cent as presented in paragraph A1.28), we obtain the average downstream ongoing cost for BT's SFBB portfolio, which is £[✂] for the first 18 months and £[✂] thereafter.

Upfront costs applicable to an EEO

A1.171 In this sub-section we set out our assessment of the upfront costs of acquiring SFBB customers.

Connection costs

A1.172 As set out in paragraphs A1.80 to A1.81, a WLR and GEA connection are required to receive SFBB services. BT's Model therefore included the following:

i) GEA Connection – this is the charge paid to Openreach for all SFBB connections.

ii) GEA Managed Install – this is a charge paid to Openreach for all GEA connections. It covers the cost of the connection of a base module, CP router and a PC to the network.

iii) Line Connection – this is the charge paid to Openreach to connect customers who are either switching from other operators using WLR / MPF access or being provided with a new line (e.g. customers who previously did not have a broadband or voice service or are switching from a cable-based broadband service). BT's Model also included the retail cost associated with new connections. The scale of this cost depends on which of the two categories a customer belongs to. As BT's customers switching to SFBB from another BT broadband service (either SBB or SFBB) will already have a WLR connection, no WLR connection charge or retail cost is incurred for these customers.

GEA Connection

A1.173 In February 2013 the GEA connection charge, as published by BT Openreach, was £80 (all Openreach charges exclude VAT).[565]

GEA Managed Install

A1.174 In February 2013, GEA Managed Install incurred a £25 charge, as published by BT Openreach.[566]

Line connection

A1.175 The BT Model included an estimate of the line connection charge which was £[✂], based on the following assumptions:

- [✂] per cent of customers are existing BT subscribers (incurring no cost);
- [✂] per cent of customers switch from another CP using MPF or WLR (line takeover) - £[✂] per takeover;

[565] See: http://www.openreach.co.uk/orpg/home/products/pricing/loadProductPriceDetails.do?data=yzq%2FQaGYa3hVgsB2ZYfjHxzfISuq3px%2FWFtgATP2kPRZ6rNZujnCs99NbIKJZPD9hXYmiijxH6wr%0ACQm97GZMyQ%3D%3D

[566] See: http://www.openreach.co.uk/orpg/home/products/pricing/loadProductPriceDetails.do?data=yzq%2FQaGYa3hVgsB2ZYfjHxzfISuq3px%2FWFtgATP2kPRZ6rNZujnCs99NbIKJZPD9hXYmiijxH6wr%0ACQm97GZMyQ%3D%3D

- [✂] per cent of customers require a line connection - £[✂] per connection.

A1.176 The cost estimates for takeover and connection are based on Openreach WLR connection/takeover costs[567] and retail connection costs. The latter are taken from BT's regulatory accounting system for the year 2011/12, which produces fully allocated cost (FAC) calculations for line connections and takeovers. BT's [✂] system then applies cost-volume relationships to produce a LRIC view of total costs. BT divides this by the number of residential connections and takeovers, which is sourced from Openreach's [✂] management information system.[568]

A1.177 The assumption that [✂] per cent of customers are existing BT subscribers was based on BT's forecast of fibre new installs as a percentage of total new fibre installs plus copper to fibre regrades in its business case. The split between new customers that require a takeover or a new connection was based on 2011/12 data sourced from the [✂] system discussed above. This provided data on the total volume of takeovers and connections for that financial year.[569]

A1.178 We have obtained the relevant data from BT's regulatory accounting system and have verified that BT's retail connection cost estimates are accurate for the financial year 2011/12. In order to be consistent with the rest of our analysis, we requested data based on 2012/13 costs from BT.[570] BT extracted this information, which suggested there had been a significant reduction in both new line connection costs (by £[✂]) and takeover costs (by £[✂]). However, BT explained that it did not consider the 2012/13 cost data to be a superior set of information, as it had not been assessed and refreshed to the same extent as the 2011/12 data.[571]

A1.179 Given this clarification, we therefore use BT's 2011/12 costs and its 2012/13 line volumes to estimate the proportion of customers that require a new connection or takeover from another CPs.

A1.180 The data provide by BT indicated that:

- [✂] per cent of SFBB acquisitions in Q4 2012/13 had an existing line (incurring no cost);[572]
- [✂] per cent were migrated from other CPs[573] (incurring a cost of £[✂]);[574] and
- [✂] per cent were new connections[575] (incurring a cost of £[✂]).

---

[567] See: http://www.openreach.co.uk/orpg/home/products/pricing/loadProductPriceDetails.do?data=ccWy9ZJoVtf1gb2YRVL3pYSkcG%2Bc%2B30URCuKygKmgSNUNeIS4WkJBRh6z%2FRUAIt8maxtgrEro1A7%0Aw5V8nzAZpQ%3D%3D

[568] BT's response to 3rd s26 Notice, Q11, 26 June 2013.

[569] BT's response to 3rd s26 Notice, Q12, 26 June 2013.

[570] BT's response to 9th s26 Notice, Q13, 4 March 2014.

[571] BT's response to 9th s26 Notice, Q13, 4 March 2014.

[572] BT's response to 9th s26 Notice, Q4, 28 February 2014.

[573] BT's response to 9th s26 Notice, Q13, 4 March 2014.

[574] This is higher than the estimate in BT's Model because we use the Openreach price for migrating a previously stopped LLU MPF line rather than a line transfer. The former is more likely to be paid by BT when migrating a customer from another CP, given that BT's main non-cable competitors are Sky and TalkTalk (both of which use MPF).

[575] BT's response to 9th s26 Notice, Q13, 28 February 2014.

A1.181 On this basis, the upfront line acquisition cost for BT Infinity customers is £[✂]. Including Plusnet's acquisition costs slightly reduces the overall portfolio cost to £[✂] per customer.

A1.182 We note that this is lower than the estimate of connection costs provided by TalkTalk in its complaint. TalkTalk included a £22.77 MPF connection charge based on the following assumptions: [576]

- 40 per cent of BT Infinity 1 customers are upsold (incurring no cost);
- 45 per cent are migrated from other providers (Openreach charge before 1 April 2013 was £33.54):[577] and
- 15 per cent are newly provided lines (Openreach charge before 1 April 2013 was £51.16).

A1.183 This gives a weighted upfront cost of £22.77 per customer.[578] However, the Openreach costs of migration and new connection are different for a MPF operator, with the migration charge being higher and the new provision charge being lower. The proportion of new BT SFBB customers needing a new line is also significantly lower than what TalkTalk assumed. If we used Openreach's MPF charges instead of the WLR charges (while maintaining BT's new connection/takeover percentages set out in paragraph A1.180), the overall acquisition cost for the portfolio would be lower at £[✂]. The table below sets out the differences between the calculations.

Table A1.13: Line acquisition cost summary

Charge	New line	Takeover	Existing customer
WLR Cost (Openreach)	£50.44	£43.33	£0
MPF Cost (Openreach)	£51.16	£33.54	£0
Retail cost	£[✂]	£[✂]	£0
Proportion of new connections (based on BT data)	[✂]%	[✂]%	[✂]%
WLR Cost		**[✂]**	
MPF Cost[579]		**[✂]**	

[576] TalkTalk complaint (confidential), 13 March 2013, page 95, paragraph 376.
[577] See: http://www.openreach.co.uk/orpg/home/products/pricing/loadProductPriceDetails.do?data=totid5BwFmkf9vLcBITRyZF9loRxWIbIKK6V7YWmlYAlMnGHsqdC0vzO163bJmh34D91D7M0q8u%2F%0AlISgtIFAKw%3D%3D
[578] TalkTalk complaint (confidential), 13 March 2013, page 95, paragraph 376.
[579] Our estimate of the MPF cost does not include the retail cost as this was not included in the estimate provided by TalkTalk. However, including this would still result in a lower cost than for WLR due to the higher takeover charge.

Marketing costs

A1.184 Marketing costs cover the costs incurred to acquire new subscribers and retain existing subscribers. This includes expenditure on TV advertising, direct mail-outs, and event sponsorship.

A1.185 In 2012/13, BT Consumer spent £[✂] on marketing and sales.[580] In its Model BT made an allocation of £[✂] to fibre broadband and divided this by a forecast fibre base in 2012/13 of [✂] customers. This gave an upfront marketing cost of £[✂] per acquired customer.

A1.186 Having reviewed BT's methodology, we consider that BT did not allocate enough marketing costs to its SFBB customers. In particular, BT excluded all marketing costs associated with acquiring voice customers from its Model, even though BT generally markets dual-play offers and so its new Infinity customers will also take voice (which is reflected by the fact that BT's Model includes revenues and other costs associated with voice). Furthermore, BT only allocated marketing spend on upselling existing customers to SFBB and did not allocate any spend associated with gaining customers that had no previous contract with BT. We consider that the latter is relevant as a significant proportion of BT's SFBB acquisitions in the period under consideration were also new to BT. We therefore re-allocated BT's marketing costs and derived a higher upfront cost of £[✂] per acquired customer. Further details of our calculation can be found in Annex 2.

A1.187 In addition, BT's management accounts for 2012/13 include £[✂] of cost for 'affiliates/pay per click'.[581] These relate to costs paid to online comparison sites (such as Moneysupermarket) and to search engines (such as Google) to support search results position. BT's Model did not include any allocation of this but we consider it to be an acquisition cost for new broadband customers as it is related to online activity, and therefore unlikely to be relevant for voice-only subscribers. We gathered from BT information which provided a breakdown of search terms and payments to price comparison sites to different product lines. BT provided a breakdown of payments based on whether they were related to broadband, calls, TV or fibre.[582] Based on this information, we calculated an upfront affiliates/pay per click cost of £[✂] per customer (see Annex 2 for further details).

A1.188 We note that these costs are slightly lower than what TalkTalk estimated in its complaint. TalkTalk estimated an upfront marketing cost of £64.29, which was based on an assumption that BT's annual marketing spend was £108 million (based on 2010 data sourced from Nielsen) and that 40 per cent of this was on BT Infinity customers. TalkTalk divided this by 672,000, which was its estimate of BT gross additions.[583] Our estimate is lower than TalkTalk's because we have identified a significant proportion of BT's marketing spend as ongoing (for example customer retention) and so it is included as a monthly rather than an upfront cost. Furthermore, as set out in Annex 2, we have allocated BT's marketing spend in proportion to the volume of new customers. In 2012/13, new SFBB acquisitions accounted for around [✂]% of BT's total acquisitions which is lower than TalkTalk's

[580] BT's response to 3rd s26 Notice, Q19 and Q20, 24 June 2013.
[581] BT's response to 3rd s26 Notice, Q19 and Q20, 24 June 2013.
[582] BT's response to 6th s26 Notice, Q26, 18 October 2013.
[583] TalkTalk complaint (confidential), 13 March 2013, page 96, paragraph 376.

assumption of 40% (though we note that SFBB accounted for [✂]% of all BT regrades, which is also reflected in our estimate).[584]

Vouchers

A1.189 BT incurs a cost of providing Sainsbury's vouchers to new Infinity subscribers acquired via BT.com. BT's estimate of this in its Model was £[✂] (including affiliates spend). BT provided data for the third quarter of 2012/13 which showed that [✂] per cent of new Infinity additions were acquired via BT.com, at a voucher cost of £[✂] per acquisition (multiplying these two figures together gives £[✂]). The unit acquisition cost of £[✂] reflects Q3 2012/13 spend of £[✂] on Infinity sales in online third party sales channels and £[✂] in relation to vouchers spend (many of which are not redeemed). These costs were divided by total BT.com sales volumes of Infinity in Q3, which were [✂], to give a cost of £[✂] per acquisition in BT's Model.[585]

A1.190 We carried out a similar calculation to estimate BT's voucher costs but used data for the full 2012/13 financial year. This showed that BT's voucher spend was £[✂] (as reported in BT's 2012/13 management accounts)[586] while its total BT.com sales volumes were [✂].[587] Dividing the cost by volumes gives a voucher spend of £[✂] for customers acquired via BT.com. As customers acquired via BT.com accounted for around [✂] per cent of total Infinity sales in 2012/13,[588] the resulting upfront cost is £[✂]. The cost for BT's entire SFBB portfolio is £[✂] as Plusnet did not offer similar vouchers.

A1.191 TalkTalk assumed a cost per voucher of £45 (per £50 voucher) and that 60 per cent of new Infinity customers are new to BT, giving a voucher cost of £27 per customer (i.e. TalkTalk assumed that up-sold customers do not receive the voucher).[589] Our assessment above shows that TalkTalk significantly overestimated the cost of the vouchers to BT. This was due to three main factors:

- TalkTalk assumed that all new Infinity customers received a voucher, whereas it is only available to new customers acquired via BT.com (which accounted for about [✂] per cent of Infinity additions in 2012/13);[590]
- the voucher offer is not always £50; and
- [✂].

Sales

A1.192 This is the cost of processing sales and commissions to sales agents. BT estimated that the cost of its sales staff resource is £[✂] per broadband customer. This is calculated by multiplying the staff time that is spent on acquiring a broadband customer by the labour cost of sales and dividing the result by the total number of

[584] BT's response to 9th s26 Notice, Q5A, 28 February 2014.
[585] BT's response to 2nd s26 Notice, Q11, 12 June 2013.
[586] BT's response to 3rd s26 Notice, Q19 and Q20, 24 June 2013.
[587] BT's response to 9th s26 Notice, Q4, 21 February 2014,
BT's response to 9th s26 Notice, Q5A and Q14, 28 February 2014.
[588] BT's response to 9th s26 Notice, Q4, 21 February 2014,
BT's response to 9th s26 Notice, Q5A and Q14, 28 February 2014.
[589] TalkTalk complaint (confidential), 13 March 2013, page 95, paragraph 376.
[590] BT's response to 9th s26 Notice, Q4, 21 February 2014.

new broadband installations. BT's estimate used data based on 2013/14 forecasts.[591] We adjusted this estimate to include the cost of acquiring voice customers as well, on the basis that BT's new SFBB customers generally take voice, and also based it on actual 2012/13 data.[592] Combining the two costs (broadband and voice) gives an upfront sales cost of £[✂] per customer. Further details of our calculations can be found in Annex 2.

A1.193 Furthermore, there is a function within BT's Customer Service centre that deals with product orders and account setup (known as 'My Order'), which is relevant to the acquisition of new customers.[593] This adds an additional £[✂] to net acquisition costs. This was not included in BT's Model but we consider it relevant because it represents spend associated with acquiring new broadband customers. We therefore include it in our estimate of upfront costs. Further details of this calculation can be found in Annex 2.

A1.194 We note that in its complaint, TalkTalk said that costs of £[✂]**[£10-£80]** per acquired subscriber were incurred for sales agents and commissions, depending on the method of acquisition. It used a figure of £[✂]**[£15-£50]** in its analysis.[594] This is slightly lower than our estimate of BT's total sales cost (£[✂]).

Discounts

A1.195 As shown in Table A1.1, BT offered a discount to the monthly subscription price for the first three months of each contract for its SFBB products in February 2013. BT also explained that the discounts only applied to fibre acquisitions that were new to BT, i.e. they did not apply to existing BT customers that were upsold from SBB.[595] Based on acquisition data provided by BT for Q4 2012/13, around [✂] per cent of fibre acquisitions were new to BT and so were eligible for a discount.[596]

A1.196 We treat discounts as an upfront cost by taking the total discount over three months and excluding VAT. Under this approach, the overall upfront discount cost for BT's SFBB portfolio in February 2013 was £[✂] per customer.

A1.197 We note that in its complaint, TalkTalk also treated discounts as an upfront cost and estimated the discount for Infinity 1 customers to cost BT £13.50 per customer (excluding VAT), on the basis that 60 per cent of new Infinity customers are new to BT.[597] As discussed above, the proportion of new Infinity customers in 2012/13 that were new to BT was significantly lower than TalkTalk's assumption.

Router

A1.198 BT's estimate of the cost of its Home Hub router was £[✂], which was based on BRF planning assumptions for 2013/14. During this period, BT's portfolio included three variants of the Home Hub (Hub 3, 4 and 5) and so BT calculated the unit cost

[591] BT's response to 3rd s26 Notice, Q10, 4 July 2013.
[592] BT's response to 6th s26 Notice, Q4, 18 October 2013.
[593] BT's response to 5th s26 Notice, Q7, 10 September 2013, BT's response to 6th s26 Notice, Q13, 18 October 2013.
[594] TalkTalk complaint (confidential), 13 March 2013, page 96, paragraph 376.
[595] BT's response to 3rd s26 Notice, Q15, 26 June 2013.
[596] BT's response to 9th s26 Notice, Q4, 28 February 2014.
[597] TalkTalk complaint (confidential), 13 March 2013, page 95, paragraph 376.

of each Hub (by dividing the total forecast cost by forecast volumes) and taking a weighted average.[598]

A1.199 In order to ensure that costs were based on actual 2012/13 data, we requested BT's spending on Home Hubs in 2012/13, which was sourced from its management accounts. The majority of Home Hubs sold during the period were accounted for by Hub 3, which was the router offered in February 2013. We divided the total cost ([✂]) by 2012/13 volumes ([✂] Hub 3s), which gives a cost of £[✂] per acquired customer.[599] Taking Plusnet into account, whose router was more costly, the acquisition router cost for BT's entire SFBB portfolio is £[✂].

A1.200 BT also included a cost of £[✂] for the delivery of the router, which is covered by the post and packaging charge to the customer (see paragraph A1.2097).[600]

A1.201 We note that TalkTalk estimated the cost of a BT router to be £[✂]**[£15-£50]** per customer in its complaint. TalkTalk said that [✂].[601] As shown above, this is [✂] than the actual cost incurred by BT.

Fibre development

A1.202 BT's Model included a one-off cost of £[✂] that covers the sunk costs of taking the consumer fibre product from development to final consumer readiness (for example building, testing and trialling the relevant products). [✂], discussed in Annex 2).[602] We consider these costs relevant to our estimate of LRIC on the basis that they would not have been incurred if BT had never had a SFBB business.

A1.203 BT provided Ofcom with details of its development spend (around £[✂]) before the launch of its Infinity products.[603] It then divided this by its forecast SFBB base at the end of 2014/15 to derive the sunk cost of development per customer.

A1.204 In the above calculation, BT's development spend on retail FTTC and FTTP was based on estimated data for 2011/12. BT's actual spend was slightly lower and so we have amended the upfront cost to take account of this, leading to a revised estimate of £[✂]. We also note that BT's most recent SFBB volumes forecast for the end of 2014/15 is slightly higher than its forecast at the time it prepared its margin squeeze model ([✂] instead of [✂]).[604] Using BT's most up-to-date data and forecasts gives an upfront development cost per customer of £[✂]. We note that this upfront cost was not included in TalkTalk's calculation.

Event charges

A1.205 As discussed in paragraphs A1.149 and A1.150, we include the following charges as part of the EEO's upfront costs:

[598] BT's response to 3rd s26 Notice, Q9, 26 June 2013.
[599] BT's response to 6th s26 Notice, Q8, 18 October 2013.
[600] BT's response to 3rd s26 Notice, Q9, 26 June 2013.
[601] TalkTalk complaint (confidential), 13 March 2013, page 95, paragraph 376.
[602] BT's response to 3rd s26 Notice, Q9, 26 June 2013,
BT's response to 5th s26 Notice, Q21, 16 September 2013.
[603] BT's response to 3rd s26 Notice, Q9, 26 June 2013,
BT's response to 5th s26 Notice, Q21, 16 September 2013.
[604] BT's response to 5th s26 Notice, Q14, 10 September 2013.

i) BT Expedites – customer installation is carried out more quickly than is standard. BT explained that it has provisioned £[✂] for Infinity Expedite costs in 2013/14 covering [✂] planned customer transactions over the same period. This gives an upfront cost of £[✂] per connection.[605] We subsequently asked BT to provide the actual costs incurred in 2012/13, which were £[✂] per acquired customer.[606]

ii) BT Abortive Visits – an unsuccessful engineer visit due to not being able to access the customer property, for which Openreach charges £85. BT provided data on the number of abortive visits during the period April to November 2012, which showed that the number of abortive visits was [✂] per cent of total (monthly) fibre connections. This implies an additional upfront charge of £[✂] (i.e. £85 multiplied by [✂] per cent).[607] We have calculated the equivalent figure based on data for all of FY 2012/13. The percentage of abortive visits is slightly higher at [✂] per cent,[608] giving a cost of £[✂] per customer.

iii) Modify upstream order charges – there is a £10 charge payable to Openreach to cancel, amend or modify a customer order. BT submitted data for the period April to November 2012 on the percentage of new Infinity customers that cancel, amend or modify their orders. The average monthly percentage of cancellations for the period between April 2012 and November 2012 was [✂] per cent while the proportion of amendments was [✂] per cent[609] for the same period.[610] BT gave a monthly figure of [✂] per cent for modifications for the period between June 2012 and November 2012; the average did not include the months of April and May 2012, when there were a large number of modifications.[611] BT explained that this was because there was a spike in order modifications during this month due to changes in the FTTC GEA input product from Openreach on Infinity 1 (from 40Mb download/2Mb upload to 40Mb download/10 Mb upload) and Infinity 2 (from 40Mb download/10Mb upload to 80Mb download/20Mb upload). This led to a high proportion of the existing fibre base being upgraded in speed which BT argued was a one-off decision to upgrade speeds and not reflective of the actual run rate for modifications.[612] We agree with BT on this point and so have calculated a revised run-rate for the period June 2012-May 2013 of [✂] per cent.[613] Based on this data, we estimate the total upfront cost of cancellations, modifications and amendments is £[✂] per acquired customer (i.e. [✂]).

A1.206 Therefore, the total upfront cost of event charges per customer is £[✂].

A1.207 We note TalkTalk's comment that the GEA product includes a minimum contract term, which means that a CP has to pay outstanding rental charges in the case that a CP cancels the GEA rental within the first 12 months, which results in a cost for downstream rivals.[614] However, this cost would be recovered as BT commits its

[605] BT's response to 3rd s26 Notice, Q17 and Q18, 3 July 2013.
[606] BT's response to 6th s26 Notice, Q6, 18 October 2013.
[607] BT's response to 3rd s26 Notice, Q17 and Q18, 3 July 2013.
[608] BT's response to 6th s26 Notice, Q7, 18 October 2013.
[609] BT's response to 3rd s26 Notice, Q13, 3 July 2013.
[610] BT's response to 3rd s26 Notice, Q13, 3 July 2013.
[611] BT's response to 3rd s26 Notice, Q13, 3 July 2013.
[612] BT's response to 6th s26 Notice, Q5, 18 October 2013.
[613] BT's response to 6th s26 Notice, Q5, 18 October 2013.
[614] TalkTalk's August submission (confidential), 28 August 2014, paragraph 5.11.

retail customers to a minimum contract of at least 12 months.[615] We therefore do not include this in our cost stack.

One-off revenues

Connection

A1.208 In February 2013, an activation charge of £25 (including VAT) was payable by new subscribers to Infinity 1 (see Table A1.1). BT subsequently increased this charge to £30 and this is the figure BT used in its Model. As our focus here is on the February 2013 offer, we use an activation fee of £25. We adjust this to exclude the relevant VAT rate, giving a one-off revenue of £[✂]. BT's other Infinity products do not incur an activation charge. We have calculated the average activation revenue for the SFBB portfolio to be £[✂].

Other payments

A1.209 BT's Model identified two additional sources of one-off revenue:

i) Firstly, £5.79 in revenue for postage and packaging of the BT Home Hub.[616] We have verified that customers pay a £6.95 charge for the delivery of a BT Home Hub when they sign up to a BT Infinity product. Excluding VAT at a rate of 20 per cent gives £5.79.

ii) Secondly, a connection charge rebate of £[✂]. BT explained that it launched a new Home Hub (Hub 5) in September 2013, which eliminates a requirement for BT Openreach to supply a router to BT Retail's customers. A connection charge rebate represents BT's estimate of this cost saving.[617] However, given that additions to BT's Infinity customer base in February 2013 would have used Hub 3, which did require a router, we do not consider it appropriate to include a connection charge rebate. We therefore omit this one-off revenue from our calculation.

Net acquisition costs per dual-play user

A1.210 Table A1.14 presents our estimates of upfront costs for BT's SFBB dual-play portfolio. Summing all the above upfront costs gives a total of £[✂] for each dual-play SFBB customer acquired. We explain how we have estimated incremental upfront TV costs in the following sub-section.

[615] See for example details of BT's product offers. http://www.productsandservices.bt.com/products/broadband/packages
[616] BT's response to 3rd s26 Notice, Q9, 26 June 2013.
[617] BT's response to 3rd s26 Notice, Q9, 26 June 2013.

Table A1.14: Average upfront cost per dual-play customer

Source	Cost
Connection	£[✂]
Marketing and Affiliates	£[✂]
Vouchers	£[✂]
Sales	£[✂]
Discounts	£[✂]
Router	£[✂]
Router P&P	£[✂]
Fibre development	£[✂]
Event charges	£[✂]
Connection Revenues	£[✂]
Net Acquisition Costs	**£[✂]**

TV

A1.211 As discussed in paragraphs A1.28 to A1.30, we include BT TV in our overall assessment by considering the costs incurred that exceed those for SFBB. BT's Model included four upfront items for TV: YouView box; delivery cost; other connection costs; and connection revenues.

YouView Box

A1.212 Customers that sign up to BT TV on YouView do not have to pay for the YouView box, which was the primary TV platform BT offered its customers from February 2013.[618] BT therefore incurs a cost of providing the box for free. BT's Model estimated this to be £[✂]. BT provided the price schedule from its agreement with Humax (the supplier of its YouView boxes), which confirmed this cost.[619] We note that in its complaint, TalkTalk explained [✂]..[620]

Other connection costs

A1.213 In its Model, BT grouped a number of additional connection costs together such as licences (these are licences needed for customer acquisition on certain platforms), powerline, remote controls and delivery and installation. These were sourced from

[618] Although the cardinal 'BT Vision' box was available to new BT TV customers at the time, the YouView platform was most actively promoted. See for example: http://www.productsandservices.bt.com/products/tv/packages
[619] BT's response to 9th s26 Notice, Q10, 28 February 2014.
[620] TalkTalk complaint (confidential), 13 March 2013, page 105, paragraph 415.

BT's BRF forecasts for 2013/14, with the total cost divided by the number of gross TV additions forecast for the year. This gave an upfront cost of £[✂] per acquired customer. The majority of this cost was accounted for by installation costs and powerline.

A1.214 We also carried out the above calculation using 2013/14 data but based our assessment on all TV packages and not just Essentials. This gives an estimate of £[✂] per customer.[621] We use 2013/14 data for two main reasons. The first is that the powerline cost for BT's 'Extra packages' are significantly lower than those for Essentials and Unlimited because multicast customers do not incur these costs (instead they require hardwiring via an Ethernet cable). We therefore use forecast data as it reflects this. Furthermore, we noted that BT's [✂].[622] We therefore consider it appropriate to include these cost increases in our estimates.

Additional SG&A Costs

A1.215 As explained in Annex 2, we estimate that SFBB customers that take TV incur an additional upfront cost of £[✂] in SG&A costs.

Connection revenues

A1.216 BT's Model included a TV activation fee of £[✂] and a delivery charge of £[✂] for the Home Hub (excluding VAT). We have verified that customers pay a £[✂] charge for delivery when they sign up to BT YouView. Excluding VAT at a rate of 20 per cent gives £[✂]. We have also verified the TV activation charge of £[✂] (including 20 per cent VAT). We include both of these revenues in our assessment of BT's margins as a (negative) acquisition cost.

A1.217 The table below summarises our assessment of net acquisition costs for BT TV. Summing all of the above TV acquisition costs gives an additional cost of £[✂].

Table A1.15: Average upfront TV cost per triple-play customer

Source	Cost
YouView box	£[✂]
Other costs	£[✂]
Additional SG&A	£[✂]
Connection revenues	£[✂]
Total	**£[✂]**

Average upfront cost per SFBB User

A1.218 The two previous sub-sections summarise our estimates of the net upfront costs for BT's dual-play SFBB customers (£[✂]) and the additional upfront cost of providing

[621] BT's response to 6th s26 Notice, Q3, 18 October 2013, BT's response to 9th s26 Notice, Q10, 28 February 2014.
[622] BT's response to 6th s26 Notice, Q3, 18 October 2013, BT's response to 9th s26 Notice, Q10, 28 February 2014.

BT TV (£[✂]). The latter implies that the net upfront cost incurred by a triple-play customer is £[✂].

A1.219 By weighting dual- and triple-play upfront costs by their acquisition weights (i.e. [✂]per cent and [✂]per cent as presented in paragraph A1.28), we obtain the average revenue for BT's SFBB portfolio, which is £[✂].

Calculation of payback period

Churn rates

A1.220 In order to determine a reasonable payback period, it is necessary to understand the EEO's expected customer lifetime. We note that in its complaint, TalkTalk presented its monthly customer churn in the last six months of 2012 as [✂]**[>1]** per cent for SFBB, which suggests an average customer lifetime of approximately [✂]**[<8 years]**.[623] In BT's Model, it assumed an annual churn rate of [✂] per cent, giving a customer lifetime of [✂] years. This was based on the historic churn rate (since 2009/10) for all broadband customers, including fibre.

A1.221 We asked BT to provide quarterly churn data for its broadband customers (including Plusnet) since the start of 2009/10. BT split the data into SFBB and SBB customers.[624] We applied the following formula to calculate the average customer lifetime for each quarter and took the average in each financial year:

$$ACL = \frac{-1}{ln\,(1-c)}$$

A1.222 Where *ACL* is the average customer lifetime and '*c*' is the churn rate.[625] This is the formula that was applied in the *Freeserve* case.[626] Average customer lifetimes are presented in Table A1.16:

Table A1.16: BT Average Customer Lifetime (in years), 2009-2013

Product	09/10	10/11	11/12	12/13	3 / 4 year average
All broadband	[✂]	[✂]	[✂]	[✂]	[✂]
SFBB	[✂]	[✂]	[✂]	[✂]	[✂]
SBB	[✂]	[✂]	[✂]	[✂]	[✂]

Source: BT[627]

[623] TalkTalk complaint (confidential), 13 March 2013, page 97, paragraph 381.
[624] BT's response to 5th s26 Notice, Q18, 10 September 2013,
BT's response to 6th s26 Notice, Q2, 18 October 2013.
[625] The churn rate is defined as the number of subscribers who cease taking a service during the period expressed as a percentage of the number of subscribers at the beginning of the period.
[626] Case CW/00613/04/03 *Investigation into BT's residential broadband pricing* (2010), paragraph 4.63 (footnote 172). Decision available at: http://stakeholders.ofcom.org.uk/binaries/enforcement/competition-bulletins/closed-cases/all-closed-cases/cw_613/decision.pdf.
[627] BT's response to 5th s26 Notice, Q18, 10 September 2013,
BT's response to 6th s26 Notice, Q2, 18 October 2013.

A1.223 Unsurprisingly, given that it has only been on offer since the start of 2010, the churn for fibre broadband is significantly lower than copper broadband as the majority of customers are locked into 18 month contracts (at the end of BT's 2012/13 financial year, [✂] per cent of BT's SFBB customers were added in the previous 18 months).[628] These customers cannot churn without being liable for early termination charges. This results in an artificially long average customer lifetime for SFBB. We therefore do not consider it appropriate to use the SFBB churn rate to calculate the average customer lifetime and we instead use the average customer lifetime for SBB. We consider this to be a reasonable benchmark for churn and customer lifetime on the basis that the market for SBB is mature and competitive at the retail level, suggesting that the churn data should reflect a steady-state equilibrium. As the market develops, the majority of customers that take SBB are also likely to take SFBB meaning that, in the medium-to-long term, there is nothing intrinsically different between SFBB and SBB customers that will drive material differences in churn.

A1.224 We therefore consider that it is more appropriate to use SBB churn in this case and base our analysis on BT's actual historic churn data for SBB broadband. Table A1.17 suggests that a suitable ACL to use in our assessment is [✂] years, based on the average ACL during the period 2009/10 to 2012/13 for copper broadband. [629] We note that according to data produced by Enders Analysis, TalkTalk's annualised on-net churn rate during the period from December 2012 to December 2013 ranged from 17 per cent to 20 per cent,[630] giving an inferred ACL of 4.5 to 5.4 years. BT noted that our ACL assumption is [✂] months shorter than using the 2012/13 figure in the above table.[631] Due to the year-on-year changes observed in the data, we consider an average is more appropriate. We also note that BT considers the superior speeds and reliability will support lower churn in the long-run.[632] However, we continue to consider that the SBB market is a reasonable benchmark and so base our ACL estimate on SBB churn rates.

A1.225 We note that [✂] years is different from the broadband customer lifetimes adopted in other broadband margin squeeze cases, for example *Telefónica*[633] and *Freeserve*,[634] both of which assumed a customer lifetime of three years.

A1.226 However, we note that both *Telefónica* and *Freeserve* had to make an assessment of ACL based on a fast-growing and immature market (copper broadband in 2001-2006 in *Telefonica* and the period up to 2004 in *Freeserve*). In the former case, it was noted that average lifetimes

> *"must be handled with caution. Telefónica's subscribers average lifetime is likely to be higher than it would be in a competitive market,*

[628] BT's response to 9th s26 Notice, Q4, 21 February 2014.
[629] The ACL partly depends on the period considered. Estimating an ACL based on more recent data (e.g. excluding 2009/10) would result in [✂] and so would not affect our conclusions.
[630] Enders Analysis. TalkTalk Group Q2 2013/14 results: Sport-less performance (November 2013).
[631] BT's August submission (confidential), 6 August 2014, paragraph 2.40.
[632] BT's August submission (confidential), 6 August 2014, paragraphs 2.39-2.41.
[633] Case COMP/38.784 *Wanadoo España v Telefónica* (2007), paragraph 489.
[634] Case CW/00613/04/03 *Investigation into BT's residential broadband pricing* (2010). Decision available at: http://stakeholders.ofcom.org.uk/binaries/enforcement/competition-bulletins/closed-cases/all-closed-cases/cw_613/decision.pdf

> *as a consequence of the market power of the dominant undertaking"*[635]

and

> *"the churn rates over a period in which the number of customers has been growing significantly cannot be considered representative. The only such rates that would be useful for the calculation of the average lifetime would be rates observed among a stabilised customer base. Telefónica's formula may be appropriate in a non-growing market (in terms of number of subscribers)."*[636]

A1.227 It was also noted that further responses by Telefónica indicated an average customer lifetime of four years. The European Commission noted different assumptions used in previous cases (e.g. 4 years in *Wanadoo*,[637] 3 years in some national cases, 2 years in *Telefónica*) and decided that 3 years was appropriate "*in keeping with economic reality and the practice of competition and regulatory authorities.*"[638]

A1.228 As discussed above, we consider that it is appropriate to use the SBB churn data as SBB is no longer an immature or fast growing product, meaning that the customer base has been relatively stable. Furthermore, unlike the EC's assessment in the *Telefónica* case, BT does not have significant market power at the retail level in SBB.

A1.229 In *Freeserve*, Ofcom had to consider a range of reasonable forecasts for churn rates due to the fact that there was not enough historic data.[639] When amortising development costs, Ofcom used a period of three years on the basis that it was a "*reasonable period for amortising costs in respect of 'new economy businesses' in immature markets and [it] complies with BT's published accounting policies.*"[640] While this was an appropriate approach in that case, we consider that it is appropriate in this investigation to use available evidence on churn rates in relation to a product (SBB) that is similar to SFBB and one where the customers are likely to be the same over the long-term (as SBB users switch to SFBB).

Cost of capital

A1.230 Our analysis of the payback period requires an assumption on the EEO's cost of capital, which is used to discount future margins. We apply the pre-tax nominal weighted average cost of capital (WACC) for the Rest of BT,[641] which is also what BT used in its Model. We use the estimate of the Rest of BT's pre-tax nominal WACC that was published in the 2013 BCMR Statement, which is 9.9 per cent.[642]

---

[635] Case COMP/38.784 *Wanadoo España v Telefónica* (2007), paragraph 478.
[636] Case COMP/38.784 *Wanadoo España v Telefónica* (2007), paragraph 482.
[637] Case COMP/38.233 *Wanadoo Interactive* (2003), paragraph 78.
[638] Case COMP/38.784 *Wanadoo España v Telefónica* (2007), paragraph 486.
[639] Case CW/00613/04/03 *Investigation into BT's residential broadband pricing* (2010), Annex 6.
[640] Case CW/00613/04/03 *Investigation into BT's residential broadband pricing* (2010), paragraph A4.128.
[641] There are three separate estimates of WACC for BT: one for Openreach, one for BT Group and one for the Rest of BT. We use the Rest of BT.
[642] 2013 BCMR Statement, see Annex 12, (Table A14.1) http://stakeholders.ofcom.org.uk/binaries/consultations/business-connectivity/statement/annexes8-17.pdf

We consider that this is the appropriate figure for our assessment as it would have been the published rate for the time period under investigation and the rate which BT would have been aware of when setting its pricing.[643] We note that the 2014 WBA Statement adopts a forecast WACC of 10.8 per cent for the 2014/15 – 2016/17 charge control period.[644] Although we do not consider this to be an appropriate figure to use when discounting future margins, as it was not known to BT when setting its pricing in 2013, we have included it as a sensitivity test in Section 6. This shows that the choice of WACC has no impact on our conclusions.

Results

A1.231 Table A1.17 summarises our assessment of BT's SFBB revenues and ongoing and upfront costs per customer. For BT's SFBB portfolio, we estimate an ongoing monthly margin of £[✂] in the first 18 months and £[✂] thereafter. Given the net upfront costs of £[✂] and a cost of capital of 9.9 per cent, the monthly margin recoups the acquisition costs in [✂] years.

Table A1.17: Summary of Monthly margins and Acquisition Costs per SFBB Customer (1 February 2013 – 8 May 2013)

	First 18 months	After 18 months	Average
Monthly Revenues	£[✂]	£[✂]	£[✂]
Monthly Ongoing wholesale costs	£[✂]	£[✂]	£[✂]
Monthly Ongoing downstream costs	£[✂]	£[✂]	£[✂]
Monthly Margin	£[✂]	£[✂]	£[✂]
Upfront costs	**£[✂]**		
Payback period	**[✂] years**		

A1.232 Based on our assessment of costs and revenues for BT's SFBB portfolio, we have concluded that BT's margins were sufficient to recover its upfront acquisition costs within the average customer lifetime in relation to its February 2013 offer.

A1.233 We note that our results are significantly different from those presented by TalkTalk in its complaint, which suggested that BT's Infinity 1 dual-play product would be unprofitable after [✂]**[10-60]** years.[645] The following table compares our estimates for the dual-play Infinity 1 offer in February 2013 with those of BT's Model and the

[643] We note that, in relation to the February 2013 offer, the most recent pre-tax nominal WACC that was published before the BCMR Statement on 28 March 2013 was 9.7% in the 2012 LLCC Consultation (see 2012 LLCC Consultation, Annex 7, Table A7.1 at http://stakeholders.ofcom.org.uk/binaries/consultations/llcc-2012/annexes/LLCC_Annexes_2012.pdf). Using a WACC of 9.7% to discount future margins instead of 9.9% for the February 2013 offer has a miniscule effect of [✂] on the overall margin.
[644] 2014 WBA Statement, see Annex 7 (Table A7.32).
[645] TalkTalk complaint (confidential), 13 March 2013, page 98, paragraph 387.

analysis in TalkTalk's complaint (we are unable to do a portfolio comparison as TalkTalk did not estimate this).

Table A1.18: Analysis Comparison for Dual-play Infinity 1

	TalkTalk	BT	Ofcom
Revenues	£[✂]	£[✂]	£[✂]
Ongoing wholesale costs*	£[✂]	£[✂]	£[✂]
Ongoing downstream costs	£[✂]	£[✂]	£[✂]
Monthly margin	£[✂]	£[✂]	£[✂]
Upfront costs	£[✂]	£[✂]	£[✂]

* Our definition of wholesale costs is restricted to wholesale inputs purchased from Openreach (i.e. GEA and WLR/MPF). TalkTalk included interconnection costs, event charges and GEA costs in its wholesale cost estimates. In order to make the costs comparable with our own estimates (as well as BT's), we have included these in the downstream costs.

A1.234 Our estimate of upfront costs is similar to BT's and our monthly margin calculation lies between TalkTalk and BT's estimates, though they are much closer to the latter. The most significant differences between our analysis and TalkTalk's analysis are in relation to BT's monthly revenues and its downstream costs.

A1.235 [✂].

A1.236 [✂].

A1.237 Although we consider that the relevant output increment for the margin squeeze test is BT's SFBB portfolio (rather than an individual 'product' test, see Section 5), we note that our assessment of the Infinity 1 product (which TalkTalk considers to be suitable for considering a margin squeeze)[646] shows it is profitable over BT's average customer lifetime. This applies to both the dual-play and triple-play Infinity 1 product and it also applies to the May 2013 and January 2014 offers (discussed below).

[646] TalkTalk complaint (confidential), 13 March 2013, page 87, paragraph 350.

The 9 May 2013 Offer

Introduction

A1.238 In this sub-section, we set out BT's offer from 9 May 2013 to 3 January 2014 and explain what changes were made relative to the February 2013 offer discussed above. From 9 May 2013, BT began to offer BT Sport to its broadband customers at no additional charge. Our methodology for calculating the cost of BT Sport per customer is presented separately in Section 6 and Annex 3. Table A1.19 and Table A1.20 provide details of BT and Plusnet's SFBB offers respectively. For completeness we include details of Infinity 4, which BT officially launched on 29 July 2013, although we have not included this in our portfolio analysis due to fact that the relatively small volumes of Infinity 4 customers ([✂] at the end of December 2013)[647] mean that it would have minimal impact on the overall result.

[647] BT's response to 9th s26 Notice, Q4, 21 February 2014.

Table A1.19: BT Infinity products from 9 May 2013 to 3 January 2014

	Infinity 1	Unlimited Infinity 1	Unlimited Infinity 2	Infinity 3	Infinity 4
Price per month	£18.00	£23.00	£26.00	£35.00	£50.00
Line Rental*	£15.45	£15.45	£15.45	£15.45	£15.45
Activation fee	£30	£30	-	-	-
Download/upload speed (Mbit/s)	38 / 9.5	38 / 9.5	76 / 19	160 / 20	300 / 20
Download limit	40 GB	Unlimited	Unlimited	Unlimited	Unlimited
Calls**	Free fixed weekend	Free fixed weekend	Free fixed weekend	Free fixed evenings and weekend	Free fixed evenings and weekend
Product features	BT Sport app and online player Unlimited Wi-Fi BT SmartTalk BT Family Protection Home Hub 4 2GB Cloud BT NetProtect Plus Sainsbury voucher (online only)***	BT Sport app and online player Unlimited Wi-Fi BT SmartTalk BT Family Protection Home Hub 4 2GB Cloud BT NetProtect Plus Sainsbury voucher (online only)***	BT Sport app and online player Unlimited Wi-Fi BT SmartTalk BT Family Protection Home Hub 4 50GB Cloud BT NetProtect Plus Sainsbury voucher (online only)***	BT Sport app and online player Unlimited Wi-Fi BT SmartTalk BT Family Protection Home Hub 4 50GB Cloud BT NetProtect Plus Sainsbury voucher (online only)***	BT Sport app and online player Unlimited Wi-Fi BT SmartTalk BT Family Protection Home Hub 4 50GB Cloud BT NetProtect Plus Sainsbury voucher (online only)***
Introductory offer****	£15 for first 12 months	£20.00 for first 12 months (between 28 June and 13 September) £16.00 for first 3 months (other times)	£20.00 for first 3 months	-	-

** Customers can take the Line Rental Saver option by paying £141 upfront for 12 months rental (equivalent to £11.75 per month)*
*** From 19 April 2013 all acquisition packages were updated to be weekend calls only. For existing customer offers this change was phased over three phases on 17 May, 28 June and 18 October.*
**** Vouchers were online exclusive offers and were not used throughout the whole period. The voucher amount also varied from month-to-month.*
***** Only available to new customers and not to existing Infinity customers or customers re-grading from ADSL packages.*
Source: BT[648]

[648] BT's response to 6th s26 Notice, Q1, 18 October 2013.

Table A1.20: Plusnet fibre products from 9 May 2013 to 3 January 2014

	Essential Fibre	Essential Fibre and calls	Unlimited Fibre	Unlimited Fibre and Calls
Price per month*	£18.49	£15.99	£22.49	£19.99
Line Rental**	N/A	£14.50	N/A	£14.50
Activation fee***	£50.00	N/A	£50.00	N/A
Maximum Download/upload speed (Mbit/s)	38 / 9.5	38 / 9.5	76 / 19	76 / 19
Download limit	40 GB (unlimited off-peak)	40 GB (unlimited off-peak)	Unlimited	Unlimited
Free Calls	N/A	Fixed weekend	N/A	Fixed weekend
Product features	Plusnet Protect	Plusnet Protect	Plusnet Protect	Plusnet Protect
Introductory offer	-	-	-	£7 off for 9 months

** The table shows prices for customers in broadband market 3. They were £7 higher for customers in broadband market 1.*
*** Customers can take the Line Rental Saver option by paying £131.88 upfront for 12 months rental (equivalent to £10.99 per month)*
**** Activation fee is £50 for new customers and £25 for existing customers.*
Source: BT[649]

A1.239 In order to reflect any potential changes in BT's acquisition portfolio, for the May 2013 offer we weight individual products by BT's acquisition volumes in the first quarter of 2013/14 rather than the last quarter of 2012/13. This information is provided in the table below.

[649] BT's response to 6th s26 Notice, Q1, 18 October 2013.

Table A1.21: BT SFBB Acquisitions in Q1 2013/14

Product	Volumes (000s)	Weights
Infinity 1	[✂]	[✂]%
Unlimited Infinity 1	[✂]	[✂]%
Infinity 2	[✂]	[✂]%
Infinity 3	[✂]	[✂]%
Plusnet Essential	[✂]	[✂]%
Plusnet Unlimited	[✂]	[✂]%
Total	[✂]	

Source: BT[650]

A1.240 We also adjust our TV estimates to account for acquisitions in Q1 2013/14. In this period, the split was [✂] per cent for Essentials, [✂] per cent for Essentials Extra, [✂] per cent for Unlimited and [✂] per cent for Unlimited Extra.[651]

Revenue changes

A1.241 The main price change from May 2013 was the increase in the price of Line Rental Saver to £141 per year for Infinity customers (previously £129) and an increase in monthly line rental to £14.50 for Plusnet fibre customers (previously £13.99). In addition, BT's TV Essentials package was no longer free of charge for the first 18 months.

A1.242 In our analysis of this offer, we have adjusted revenues from line rental, updated the save offers (based on data for May 2013) and kept other revenue items the same. Our analysis of out-of-bundle revenues continues to reflect BT's entire Infinity portfolio (i.e. it includes those who upgrade to more expensive packages).

A1.243 Updating the price of Line Rental Saver and TV Essentials and adjusting for the revised save offers and acquisition weights results in BT's portfolio revenue slightly increasing to £[✂] for the first 18 months and £[✂] thereafter.

Wholesale Cost changes

A1.244 BT Openreach reduced the monthly rental charge for WLR from 1 May 2013 to £7.77[652] (previously £8.23). This means that the average wholesale cost of BT's SFBB portfolio falls to £[✂] per customer.

---

650 BT's response to 9th s26 Notice, Q4, 21 February 2014.
651 BT's response to 9th s26 Notice, Q9, 4 March 2014.
652 See: http://www.openreach.co.uk/orpg/home/products/pricing/loadProductPriceDetails.do?data=vZC%2BGHIiu80GtUKWLu%2BtzAfqMZEuYNVwUnHGezzgOd1UNeIS4WkJBRh6z%2FRUAIt8maxtgrEro1A7%0Aw5V8nzAZpQ%3D%3D

Downstream Cost changes

A1.245 We do not amend any of our downstream cost estimates for the May 2013 offer as we continue to base our estimates on 2012/13 data where possible (or otherwise follow the methodology set out earlier in relation to the February 2013 offer). Therefore, the only changes are caused by adjusting the acquisition weights (with more weight given to Unlimited Infinity 1 compared to the February 2013 offer, at the expense of the weights given to Infinity 1 and Infinity 2), which results in the average downstream cost slightly increasing to £[✂] in the first 18 months and £[✂] thereafter.

Upfront Cost changes

A1.246 For the May 2013 offer, we have made the following changes to the upfront acquisition costs:

i) An increase in the GEA connection cost from £80 to £92, based on an increase in the relevant Openreach charge on 1 April 2013;[653]

ii) Changes to the Openreach WLR connection prices (from £50.44 to £47.11 for new WLR connections and from £43.33 to £40.86 for takeovers from LLU MPF lines)[654] and an increase in the proportion of new SFBB customers requiring a new line (to [✂] per cent)[655] result in an increase in the line connection cost to £[✂];

iii) Changes to BT's introductory offers (primarily to Plusnet products and BT Infinity 1 – see Table A1.1, Table A1.2, Table A1.20 and Table A1.21) mean that our revised estimate of the average discount of the BT SFBB portfolio increases to £[✂];

iv) BT started using a new Home Hub from May 2013 (Home Hub 4 instead of Home Hub 3). The actual cost data BT was able to provide on Hub 4 for 2012/13 was limited as BT only issued a limited number that year ([✂]).[656] We therefore base our estimates on BT's forecasted costs in 2013/14 for Hub 4, when it expected to issue [✂] Hub 4s. This gives a cost of £[✂] per Hub[657] (we note that using the forecast data results in a higher cost than using actual data); and

v) BT increased the upfront connection charge for Infinity 1 to £30 (including VAT) and also applied it to new Unlimited Infinity 1 customers as well. This increases overall connection revenues to £[✂] per customer acquired (this also reflects changes to Plusnet's introductory discounts, though this has minimal impact due to Plusnet's small fibre volumes).

---

[653] See: http://www.openreach.co.uk/orpg/home/products/pricing/loadProductPriceDetails.do?data=yzq%2FQaGYa3hVgsB2ZYfjHxzfISuq3px%2FWFtgATP2kPRZ6rNZujnCs99NbIKJZPD9hXYmiijxH6wr%0ACQm97GZMyQ%3D%3D

[654] See: http://www.openreach.co.uk/orpg/home/products/pricing/loadProductPriceDetails.do?data=ccWy9ZJoVtf1gb2YRVL3pYSkcG%2Bc%2B30URCuKygKmgSNUNeIS4WkJBRh6z%2FRUAIt8maxtgrEro1A7%0Aw5V8nzAZpQ%3D%3D

[655] BT's response to 9th s26 Notice, Q4, 21 February 2014.

[656] BT's response to 6th s26 Notice, Q8, 18 October 2013.

[657] BT's response to 3rd s26 Notice, Q9, 26 June 2013.

A1.247 We maintain the same estimates for other cost items as we use 2012/13 data wherever possible (or otherwise follow the methodology set out earlier in relation to the February 2013 offer). This results in a net upfront cost estimate for BT's SFBB portfolio between 9 May 2013 and 3 January 2014 of £[✂].

Payback and headroom

A1.248 Table A1.22 summarises our assessment of BT's SFBB margins and upfront costs in the relevant period. For BT's SFBB portfolio, we estimate an ongoing monthly margin of £[✂] in the first 18 months and £[✂] thereafter. Given the net upfront costs of £[✂] and a cost of capital of 9.9 per cent, the monthly margin recoups the acquisition costs in [✂] years.

Table A1.22: Summary of Monthly margins and Acquisition Costs per SFBB Customer (9 May 2013 – 3 January 2014)

	First 18 months	After 18 months	Average
Monthly Revenues	£[✂]	£[✂]	£[✂]
Monthly Ongoing wholesale costs	£[✂]	£[✂]	£[✂]
Monthly Ongoing downstream costs	£[✂]	£[✂]	£[✂]
Monthly Margin	**£[✂]**	**£[✂]**	**£[✂]**
Upfront costs	**£[✂]**		
Payback period	**[✂] years**		
Headroom before BT Sport	**£[✂] per month**		

A1.249 Before taking into account BT Sport, BT has a positive margin on its SFBB portfolio that is sufficient to recover the upfront costs over BT's average customer lifetime. However, with the introduction of the BT Sport offer in May 2013, it is necessary to include this in our assessment of BT's margins. The 'headroom' figure in Table A1.22 is the amount that BT's monthly margin could be reduced by yet still achieve average customer payback in [✂] years. Based on the above analysis, the headroom for the May 2013 offer is £[✂].

The 4 January 2014 Offer

Introduction

A1.250 BT implemented a number of price changes on 4 January 2014. Table A1.23 and Table A1.24 provide details of BT and Plusnet's SFBB offers respectively. They show that the headline prices to new customers were not significantly different to those before 4 January and, in the case of Infinity 1, were reduced for the first six months. BT confirmed that the increases in monthly subscription prices (mostly

around 6.5 per cent) applied to *existing* customers rather than new customers.[658] As discussed in Section 5, our analysis is based on a cohort of new customers and so we do not factor in these price changes.

A1.251 The main price rises we take into account for new customers are those that applied to certain calls (for example international calls), line rental and call features. In terms of the latter, the price increases were related to two call features that had previously been free of charge: BT Answer 1571 and BT Privacy with Caller Display. From 4 January 2014, BT began charging customers £1.75 per month (including VAT) for each of these services.[659] We explain below how we have taken this into account in our analysis of BT's margins.

Table A1.23: BT Infinity products from 4 January 2014 to 31 January 2014

	Infinity 1	Unlimited Infinity 1	Unlimited Infinity 2	Infinity 3	Infinity 4
Price per month	£18.00	£23.00	£26.00	£35.00	£50.00
Line Rental*	£15.99	£15.99	£15.99	£15.99	£15.99
Activation fee	£30.00	£30.00	Not applicable	Not applicable	Not applicable
Maximum Download/upload speed (Mbit/s)	38 / 2	38 / 9.5	76 / 19	160 / 20	300 / 20
Download limit	20 GB	Unlimited	Unlimited	Unlimited	Unlimited
Free calls	Fixed weekend	Fixed weekend	Fixed weekend	Fixed evenings and weekend	Fixed evenings and weekend
Product features	BT Sport app and online player Unlimited Wi-Fi BT SmartTalk BT Family Protection Home Hub 5 2GB Cloud Sainsbury voucher (online only)**	BT Sport app and online player Unlimited Wi-Fi BT SmartTalk BT Family Protection Home Hub 5 2GB Cloud BT NetProtect Plus Sainsbury voucher (online only)**	BT Sport app and online player Unlimited Wi-Fi BT SmartTalk BT Family Protection Home Hub 5 50GB Cloud BT NetProtect Plus Sainsbury voucher (online only) **	BT Sport app and online player Unlimited Wi-Fi BT SmartTalk BT Family Protection Home Hub 5 50GB Cloud BT NetProtect Plus Sainsbury voucher (online only) **	BT Sport app and online player Unlimited Wi-Fi BT SmartTalk BT Family Protection Home Hub 5 50GB Cloud BT NetProtect Plus Sainsbury voucher (online only) **
Introductory offer***	£7.50 for first 6 months then £15 for the next 12 months	£16.00 for first 3 months	£20.00 for first 3 months	Not applicable	Not applicable

** Customers can take the Line Rental Saver option by paying £141 upfront for 12 months rental (equivalent to £11.75 per month)*

[658] BT's response to 9th s26 Notice, Q2, 21 February 2014.
[659] BT's response to 9th s26 Notice, Q2, 21 February 2014.

*** Vouchers were online exclusive offers and were not used throughout the whole period. The voucher amount also varied from month-to-month.*
**** Only available to new customers and not to existing Infinity customers or customers re-grading from ADSL packages.*
Source: BT[660]

Table A1.24: Plusnet fibre products from 4 January 2014 to 31 January 2014

	Essential Fibre	Essential Fibre and calls	Unlimited Fibre	Unlimited Fibre and Calls
Price per month*	£18.49	£15.99	£22.49	£19.99
Line Rental**	Not applicable	£14.50	Not applicable	£14.50
Activation fee***	£50.00 (£25 for existing customers)	Not applicable	£50.00 (£25 for existing customers)	Not applicable
Maximum Download/upload speed (Mbit/s)	38 / 9.5	38 / 9.5	76 / 19	76 / 19
Download limit	40 GB (unlimited off-peak)	40 GB (unlimited off-peak)	Unlimited	Unlimited
Free Calls	Not applicable	Fixed weekend	Not applicable	Fixed weekend
Product features	-	-	Plusnet Protect	Plusnet Protect
Introductory offer	Not applicable	Not applicable	Not applicable	Not applicable

** The table shows prices for customers in broadband markets 2 and 3. They were £7 higher for customers in broadband market 1.*
*** Customers can take the Line Rental Saver option by paying £131.88 upfront for 12 months rental (equivalent to £10.99 per month)*
**** Activation fee is £50 for new customers and £25 for existing customers.*
Source: BT[661]

A1.252 In order to reflect any potential changes in BT's acquisition portfolio, for the January 2014 offer we weight individual products by BT's acquisition volumes in the third quarter of 2013/14. This information is provided in the table below. The proportion of new SFBB customers acquired in Q3 2013/14 that took a triple-play service ([✂] per cent) was higher compared to the quarters analysed in the previous offers (around [✂] per cent) and so our weighting of dual-play and triple-play customers reflects this.[662]

[660] BT's response to 9th s26 Notice, Q1, 21 February 2014.
[661] BT's response to 9th s26 Notice, Q1, 21 February 2014.
[662] BT's response to 9th s26 Notice, Q5 and Q5A, 21 February 2014 and 28 February 2014.

Table A1.25: BT SFBB Acquisitions in Q3 2013/14

Product	Volumes (000s)	Weights
Infinity 1	[✂]	[✂]%
Unlimited Infinity 1	[✂]	[✂]%
Infinity 2	[✂]	[✂]%
Infinity 3	[✂]	[✂]%
Plusnet Essential	[✂]	[✂]%
Plusnet Unlimited	[✂]	[✂]%
Total	[✂]	

Source: BT[663]

A1.253 We also adjust our estimates of TV costs and revenues to account for changes in the portfolio of TV acquisitions in November and December 2013. This is because on 26 October 2013, the TV Unlimited and Unlimited Extra packages were largely withdrawn from supply to new customers.[664] It would therefore not be appropriate to give them undue weight for an offer based on January 2014 prices. In the last two months of 2013, the TV acquisition split was [✂] per cent for Essentials, [✂] per cent for Essentials Extra, [✂] per cent for Unlimited and [✂] per cent for Unlimited Extra.[665]

Revenue changes

A1.254 The main price changes in the January 2014 offer were the increase in the price of monthly line rental to £15.99 (including VAT) and the monthly fees of £1.75 each for BT Answer 1571 and BT Privacy with Caller Display.

A1.255 In order to estimate revenues from the two calling features, we requested information from BT on initial take-up among new customers. BT provided information for the period 4 January to 28 February 2014, which showed that [✂] per cent of new voice customers took the BT Answer 1571 service and [✂] per cent subscribed to the BT Privacy with Caller Display service.[666] However, the BT Privacy with Caller Display service is available for 12 months free of charge for those taking a new 12-month line rental contract and so this may overstate the share of customers who would pay for the service. We have assumed that long run take up for each service is [✂] per cent but note that this may be a conservative assumption for BT Privacy with Caller Display if a higher proportion of customers continue to subscribe after 12 months. Together our assumptions add £[✂] to monthly revenues.

[663] BT's response to 9th s26 Notice, Q4, 21 February 2014.
[664] BT's response to 9th s26 Notice, Q9, 4 March 2014.
[665] BT's response to 9th s26 Notice, Q9, 4 March 2014.
[666] BT's response to 9th s26 Notice, Q3, 7 March 2014.

A1.256 In addition, BT increased the price of certain calls by up to 6.5 per cent. The most relevant to our analysis are the increases to international call rates (by 6.44 per cent) and certain call features (by between 4.5 per cent and 6.4 per cent depending on the feature). We have therefore assumed that revenues for international calls and calling features will increase by these respective percentages (using the data provided by BT from its [✂] database, as discussed in paragraph A1.48 to A1.50). This adds £[✂] to monthly revenues.

A1.257 We also note that the maximum download limit on BT's Infinity 1 product fell from 40GB to 20GB. We did not have any actual data to calculate how this would affect usage revenues as the data we obtained was on the basis of a 40GB data cap. However, BT provided data on average usage revenues per customer for its 'Broadband' product, which is ADSL-based and has a data cap of 10GB. This suggested that usage revenues on this product in the first nine months of 2013/14 were £[✂],[667] compared to £[✂] for Infinity 1. We therefore take the mid-point of this range to estimate the revenues for a data cap of 20GB, giving £[✂] per customer month. It is possible that this slightly underestimates revenues from Infinity 1 customers if one assumes that they are more likely to go over their cap than copper broadband subscribers. However, in the absence of further information, we assume £[✂] and note that any error is likely to be immaterial to the overall result.

A1.258 Adjusting for these changes (in addition to updating the save offers to base them on January 2014 data) increases BT's average SFBB revenue to £[✂] per customer for the first 18 months and £[✂] thereafter.

Wholesale Cost changes

A1.259 BT Openreach increased the monthly rental charge for WLR to £7.78 from 20 December 2013.[668] BT also reduced the upload speed on Infinity 1 to 2Mbit/s, which results in a cheaper wholesale cost of £6.90 per month.[669] This, combined with the fact that a greater proportion of new acquisitions took Infinity 1 in the third quarter of 2013/14, means that the average wholesale cost of BT's SFBB portfolio falls to £[✂] per customer.

Downstream Cost changes

A1.260 We do not amend any of our downstream cost estimates for the January 2014 offer as we continue to base our estimates on 2012/13 data where possible (or otherwise follow the methodology set out earlier in relation to the February 2013 offer). Therefore, the only changes are caused by adjusting the acquisition weights (with more weight given to Infinity 1 and Unlimited Infinity 1 compared to the May 2013 offer at the expense of the weight given to Infinity 2, in addition to more weight being given to triple-play customers), which results in the average downstream cost slightly decreasing to £[✂] in the first 18 months and £[✂] thereafter.

[667] BT's response to 9th s26 Notice, Q6, 21 February 2014.
[668] See: http://www.openreach.co.uk/orpg/home/products/pricing/loadProductPriceDetails.do?data=vZC%2BGHIiu80GtUKWLu%2BtzAfqMZEuYNVwUnHGezzgOd1UNeIS4WkJBRh6z%2FRUAIt8maxtgrEro1A7%0Aw5V8nzAZpQ%3D%3D
[669] See: http://www.openreach.co.uk/orpg/home/products/pricing/loadProductPriceDetails.do?data=yzq%2FQaGYa3hVgsB2ZYfjHxzfISuq3px%2FWFtgATP2kPRZ6rNZujnCs99NbIKJZPD9hXYmiijxH6wr%0ACQm97GZMyQ%3D%3D

Upfront Cost changes

A1.261 For the January 2014 offer, we have made the following changes to upfront acquisition costs:

i) an increase in the proportion of new SFBB customers requiring a new line (to [✂] per cent)[670] results in an increase to the line connection cost to £[✂];

ii) changes to BT's introductory offers (primarily to BT Infinity 1 – see Table A1.20 and Table A1.24) mean that our revised estimate of the average discount of the BT SFBB portfolio increases to £[✂]; and

iii) at the time of the January offer, BT had started using a new Home Hub (Home Hub 5 instead of Home Hub 4). There is no cost data for Home Hub 5 in 2012/13 as BT did not issue any during that year. We therefore based our estimates on BT's forecasted costs in 2013/14 for Hub 5, which were £[✂] per Hub.[671] We also include a rebate to reflect the fact that Hub 5 eliminates the requirement for a BT Openreach router. BT estimates this cost saving to be £[✂], based on the market price of a router.[672] Therefore, our estimate of the upfront cost for a Home Hub 5 is £[✂] per acquired customer. The average cost for BT's entire portfolio (including Plusnet) is £[✂] per customer.

A1.262 We maintain the same estimates for other cost items relative to the May 2013 offer. This results in a net upfront cost estimate for BT's SFBB portfolio after 4 January 2014 of £[✂].

Payback and headroom

A1.263 Table A1.26 summarises our assessment of BT's SFBB margins and upfront costs for the January 2014 offer. For BT's SFBB portfolio, we estimate an ongoing monthly margin of £[✂] in the first 18 months and £[✂] thereafter. Given the net upfront costs of £[✂] and a cost of capital of 9.9 per cent, the monthly margin recoups the acquisition costs in [✂] years.

[670] BTs response to 9th s26 Notice, Q4, 21 February 2014.
[671] BT's response to 3rd s26 Notice, Q9, 26 June 2013.
[672] BT's response to 3rd s26 Notice, Q9, 26 June 2013.

Table A1.26: Summary of Monthly margins and Acquisition Costs per SFBB Customer (4 January 2014 – 31 January 2014)

	First 18 months	After 18 months	Average
Monthly Revenues	£[✂]	£[✂]	£[✂]
Monthly Ongoing wholesale costs	£[✂]	£[✂]	£[✂]
Monthly Ongoing downstream costs	£[✂]	£[✂]	£[✂]
Monthly Margin	**£[✂]**	**£[✂]**	**£[✂]**
Upfront costs	**£[✂]**		
Payback period	**[✂]**		
Headroom before BT Sport	**£[✂] per month**		

A1.264 As with our analysis of the May 2013 offer, the 'headroom' figure for BT Sport in Table A1.26 is the reduction in monthly margin that is necessary for the average customer payback period to reach [✂] years. Based on the above analysis, the headroom for the January 2013 offer is £[✂].

Annex 2

Shared costs

A2.1 As discussed in paragraph A1.15, BT incurs a number of costs that are shared across all of its products, for example marketing, customer services and IT. These are recorded in three specific management accounts: SG&A, 'Consumer Centre' and 'Other Units'.

A2.2 Unlike other cost categories in the cost stack, such as network costs or calls costs, shared costs are not directly allocated to individual products in the BT Consumer accounts. However, as discussed in Section 5, this does not mean that they are not incremental to SFBB. We consider that many of these costs are used to provide SFBB services and should be included in our assessment of downstream costs.

A2.3 In this Annex, we describe how we decided how much of the shared costs are incremental in the long run to SFBB. We start by reviewing the treatment of shared costs in the BT Model. We then explain our approach for calculating shared costs, which is based on the data from BT Consumer management accounts.

Treatment of shared costs in the BT Model

A2.4 The BT Model included an allocation of some shared costs, specifically, marketing, customer service and development, in the cost stacks of SFBB products. BT's Model also included an 'overhead' for calls and line rental ongoing costs, and a 'regulatory overhead' for both ongoing and upfront costs.

A2.5 The calls and line rental overheads were sourced from BT's 2011/12 regulatory profit and loss accounts, which are produced on a fully allocated cost (FAC) basis, though they can also be adjusted to produce LRIC estimates. For both of these products, the regulatory accounting system[673] allocates a number of shared costs such as marketing and sales, customer service, finance and billing, and bad debts.[674]

A2.6 As discussed in paragraph A1.18, BT explained that the regulatory overhead was included to be consistent with the approach it noted Ofcom had adopted in the *Freeserve*[675] case, where Ofcom found that some costs that had been included in the Consumer Broadband Regulatory P&L were not included in the Consumer Broadband Management Accounts. BT compared the regulatory P&L data for residential broadband for 2006/07 to 2008/09 (BT did not prepare regulatory P&L reports for BT Retail from 2009/10 onwards) with the broadband management accounts over the same period and found that the costs reported in the regulatory accounts were higher than those in the management accounts. Following some adjustments, including the conversion of FAC costs to LRIC, BT found that over the three year period under consideration, an uplift of [✂] per cent could be applied to

[673] Currently known as ASPIRE, to be replaced by REFINE.
[674] BT's response to 2nd s26 Notice, Q6 and Q8, 12 June 2013,
BT's response to 3rd s26 Notice, Q19, 28 June 2013.
[675] Case CW/00613/04/03 *Investigation into BT's residential broadband pricing* (2010). Decision available at: http://stakeholders.ofcom.org.uk/binaries/enforcement/competition-bulletins/closed-cases/all-closed-cases/cw_613/decision.pdf

ongoing and upfront downstream costs that are controllable at the retail level.[676] We note, however, that in its response to our information requests, BT argued that the inclusion of the call and line rental overheads and the regulatory overhead meant that there was an allocation of costs in its Model which were fixed and common across fibre, non-fibre and voice products and which were not incremental to SFBB. It submitted that the inclusion of these costs was not a concession that these costs were relevant to a margin squeeze test. Instead, it considered the inclusion of such overheads in the Model to be conservative.[677]

A2.7 Instead of using BT's overhead estimates, which are sourced from BT's regulatory accounting system (and in the case of the regulatory overhead is based on data from more than four years ago), we have taken the shared costs recorded in the management accounts and have allocated a proportion to the SFBB portfolio cost stack. We consider that this approach is more appropriate because it is based on up to date information (2012/13) and it is consistent with the approach used to estimate other items in the cost stack (e.g. platform costs and portal fees).

A2.8 Below, we set out our methodology for allocating shared costs to the SFBB portfolio cost stack.

Methodology

A2.9 BT's management accounts for individual products (e.g. for broadband and voice) provide details of revenues and costs of sales but do not include an allocation of SG&A and other shared costs.

A2.10 As discussed in Section 5, we consider the relevant cost standard to be LRIC, which consists of all those costs that are incremental in the long run to the provision of a particular service. Where a cost item is shared between a number of services, as with SG&A costs, we need to include in our calculation of LRIC the proportion of those costs that are incremental to the provision of the specific service.

A2.11 For example, customer service costs are shared across various different BT Consumer lines of business (e.g. broadband, voice, TV). However, as BT's Infinity bundles include voice and TV services, and many of BT's SFBB customers have upgraded from purchasing SBB services from BT, we consider it likely that BT would incur lower customer service costs if it did not provide SFBB. We refer to these shared costs as 'scalable' and therefore incremental. Where the provision of SFBB has no impact on a particular cost *in the long run*, however, then that cost is treated as fixed (in respect of SFBB activity) and common and should not be included in our calculation of LRIC. We refer to these costs as 'fixed and common'.

A2.12 The remainder of this Annex is structured as follows. First, we identify the shared costs we consider to be incremental to SFBB and those we consider to be fixed and common. Second, we consider the appropriate methods to allocate incremental shared costs to the SFBB cost stack. We conclude by summarising the approach we have applied to each shared cost item for our LRIC assessment and set out the results of our sensitivity testing.

[676] BT's response to 2nd s26 Notice, Q7 and Q12, 12 June 2013.
BT's response to 3rd s26 Notice, Q19, 28 June 2013.
[677] BT's response to 2nd s26 Notice, Q1, 12 June 2013.

BT Consumer Shared Costs – incremental and fixed and common

A2.13 BT's SG&A management accounts include the following items:

- [✂];
- [✂];
- [✂];
- [✂];
- [✂];
- [✂];
- [✂];
- [✂];
- [✂]; and
- [✂].

A2.14 There are also a set of [✂].[678]

A2.15 Table A2.1 sets out the SG&A and 'Centre'/'Other' costs that we consider are incremental to the SFBB portfolio, along with the total amount for each recorded in the 2012/13 BT Consumer management accounts. Our view is that each of these costs would decrease in the long run if the SFBB portfolio was not being provided by BT. We have therefore included them in our LRIC assessment of downstream SFBB costs. We have categorised the costs into one of three categories:

- shared costs related to customer acquisition;
- ongoing shared costs that are variable in the short-run; and
- ongoing shared costs that are variable in the long run.

[678] BT's response to 3rd s26 Notice, Q19 and Q20, 24 June 2013.

Table A2.1: Shared costs we have included in the SFBB portfolio cost stack

Cost Item	Description	21012/13 Value (£M)
Customer acquisition costs		
Marketing – acquisition[679]	Spending on marketing and advertising to acquire new broadband subscribers. This captures spend targeting customers with no BT subscriptions ([✂]) and spend targeted at existing BT subscribers to up-sell products ([✂]).	[✂]
Affiliates / pay per click	Payments to online comparison sites and to search engines to support results position.	[✂]
Customer services – upfront[680]	Call centre costs when a customer orders a new BT Consumer product ('My Order').	[✂]
Total Labour Cost – sales[681]	Telesales centre costs, covering (i) costs of dealing with queries about services which may lead to sales and transactions calls to complete a purchase, (ii) costs of dealing with complaints, manual processing of orders and call observation and (iii) upsell activities from other functions such as Home Movers Team and Customer Options Team (predominantly engaged in retention activity).	[✂]
Ongoing costs – Variable in the short-run		
Marketing – retention[682]	Spending on marketing and advertising to reduce churn on existing subscriber base ([✂]).	[✂]
Customer services – ongoing[683]	Call centre costs of providing customer assistance and technical support ('My Help & Support')	[✂]
Customer services – ongoing[684]	Account services such as billing enquiries and dispute handling ('My Account').	[✂]
Billing & bad debt	Costs of billing customers for BT Consumer products and any bad debt incurred in serving the customer base.	[✂]
Total Labour Cost – retention[685]	Telesales centre costs, covering retention activity carried out by the Customer Options Team and the Home Movers Team.	[✂]
Total Labour Cost – management[686]	People costs for management functions in BT Consumer.	[✂]
Development[687]	Costs related to the development of new products within the portfolio, to support increased product functionality and/or to improve the customer experience.	[✂]
People related	Costs of providing staff with travel and subsistence, bonuses,	[✂]

[679] BT's response to 5th s26 Notice, Q13, 10 September 2013.
[680] BT's response to 5th s26 Notice, Q7, 10 September 2013.
[681] BT's response to 6th s26 Notice, Q4, 18 October 2013.
[682] BT's response to 5th s26 Notice, Q13, 10 September 2013.
[683] BT's response to 5th s26 Notice, Q7, 10 September 2013.
[684] BT's response to 5th s26 Notice, Q7, 10 September 2013.
[685] BT's response to 3rd s26 Notice, Q10, 3 July 2013,
BT's response to 6th s26 Notice, Q4, 18 October 2013.
[686] BT's response to 3rd s26 Notice, Q10, 3 July 2013,
BT's response to 6th s26 Notice, Q4, 18 October 2013.
[687] BT's response to 6th s26 Notice, Q14, 18 October 2013.

costs	training etc.	
Ongoing costs – Variable in the long run		
Marketing – non-campaign[688]	Non-campaign specific costs – mostly overheads such as CRM, data, retainer fees, PR, and BT.com development.	[✂]
Customer services–overheads[689]	Overhead costs of customer services operations, including cost of building rent and energy, 3rd party support to systems and applications, employee travel and subsistence, incentives and recruitment.	[✂]
Accommodation	Costs of all property/accommodation used by BT Consumer personnel.	[✂]
Other internal/external spend/recoveries	All other overheads within BT Consumer not covered elsewhere.	[✂]
IT spend	Costs of software licences and support systems used across BT Consumer products.	[✂]
Marketing platform spend	Cost of operating and maintaining the system which holds customer marketing data.	[✂]
Miscellaneous costs	N/A	[✂]
TSO – direct and indirect	Further explanation provided below	[✂]

Source: BT[690]

A2.16 In our view, it is uncontentious that short-run variable costs should be included in our estimate of LRIC. We note that BT did not include the third category of costs (long run variable) in its Model as it has argued that these costs are not incremental to BT's SFBB portfolio. However, as discussed in Section 5, we consider it appropriate to include these long run variable costs in LRIC given the output increment we are assessing and the relevant time horizon. In particular:

- our output increment, the SFBB portfolio, includes fibre broadband, voice and TV services;
- SFBB is a rapidly growing service that is taking up an increasing proportion of products sold by BT Consumer; and
- all of the costs we describe as 'long run variable' may be considered scalable with respect to SFBB customer volumes.

A2.17 We therefore consider that most of the shared costs which BT identifies as directly or indirectly attributable to BT Consumer will be, in part, incremental to SFBB in the long run. The main category of costs which we have treated as 'fixed and common' are those which would be expected to remain invariant if BT were no longer to have the BT Consumer business.

A2.18 In the sub-section below, we discuss the different approaches we have used to allocate these costs to the SFBB portfolio.

[688] BT's response to 5th s26 Notice, Q13, 10 September 2013.
[689] BT's response to 5th s26 Notice, Q7, 10 September 2013.
[690] BT's response to 3rd s26 Notice, Q19 and Q20, 24 June 2013,
BT's response to 5th s26 Notice, Q9 and Q11, 10 September 2013.

Methods for allocating incremental shared costs

A2.19 We have used a two-step approach to allocating incremental shared costs to the SFBB portfolio.

A2.20 First, we have examined the information gathered from BT and, for each incremental shared cost item, assessed whether it provides a reasonable breakdown of costs to the individual product lines. For example, for 'My Help & Support' customer services costs, BT provided a detailed breakdown of how much it apportions to each product line [✂].[691] Where we considered that the information gathered from BT provides a reasonable basis for allocating the cost item to SFBB, we have used this information.

A2.21 Second, for all incremental shared cost items for which BT has not provided a reasonable breakdown to individual product lines, we have considered whether the cost is associated with customer acquisitions or is an ongoing cost aimed at servicing the customer. In the latter case, we have also considered whether the main cost driver was likely to be customer numbers or the number of products purchased. This is described in more detail below:

i) Customer (acquisitions) – Some of the shared costs (e.g. marketing aimed at acquiring new customers) are customer acquisition costs. We have therefore considered these as an upfront cost to be recovered over the subscriber's lifetime. In deciding how much of these costs should be attributable to SFBB, we have allocated on the basis of the number of SFBB customers acquired as a percentage of the total number of customers acquired by BT Consumer. For example, if a third of all BT Consumer customer acquisitions are to SFBB products, we have allocated a third of the total for the particular line item in the management accounts to the SFBB portfolio cost stack. This approach assumes that the cost of acquiring a voice-only customer is the same as the cost of acquiring a dual- or triple-play customer, i.e. there are economies of scope in relation to customer acquisition. We consider this to be appropriate as a large proportion of costs (for example TV campaigns, online and outdoor advertising, dealing with orders, direct mail-outs) are unlikely to be significantly affected by the number of products a customer takes.

ii) Customer (ongoing) – Other shared costs relate to supporting existing BT Consumer customers. We have treated these as ongoing costs which affect BT's monthly margin per customer. For some of these costs (for example labour costs associated with customer retention), there will be economies of scope in that their magnitude varies with the number of customers being served but not the number of products each customer subscribes to. We have allocated these costs on the basis of the number of SFBB customers as a percentage of the BT Consumer customer base. For example, if a quarter of the BT Consumer customer base is made up of SFBB customers, we have allocated a quarter of the total for the particular line item in the management accounts to the SFBB portfolio cost stack.

iii) Product – Other ongoing costs are more likely to vary in direct proportion to the number of products being sold (for example customer service costs). We have allocated these costs on the basis of the number of products (i.e. voice, broadband and TV) SFBB customers subscribe to as a percentage of the total number of products sold by BT Consumer. For example, if a quarter of the total

[691] BT's response to 5th s26 Notice, Q7, 10 September 2013.

number of products being supplied by BT Consumer is to SFBB customers, we have allocated a quarter of the total for the particular line item in the management accounts to the SFBB portfolio cost stack. This method assumes that a dual-play customer bears twice the cost of a voice-only customer and that a triple-play customer bears three times that of a voice-only customer. This therefore assumes that there are no economies of scale in supplying multiple services to the same customer.

A2.22 The following numerical example illustrates the difference between the 'customer' and 'product' approach (the numbers used are purely illustrative):

- an operator has 1 million customers in total, of which 200,000 buy SFBB (i.e. 20 per cent);
- the operator sells 2 million products (e.g. voice, broadband, TV) in total, 500,000 of which are purchased by SFBB customers (i.e. 25 per cent);
- total billing costs are £10 million per year;
- under the 'customer' approach, we would allocate £2 million of billing costs to the operator's SFBB portfolio (i.e. £10 million * 20%) or £10 per SFBB customer (2 million / 200,000); and
- under the 'product' approach, we would allocate £2.5 million of billing costs to the operator's SFBB portfolio (i.e. £10 million * 25%) or £12.50 per SFBB customer (2.5 million / 200,000).

A2.23 We have used the three approaches above depending on whether the cost item is a customer acquisition cost or ongoing cost and whether an ongoing cost is principally driven by the number of customers being served or the number of products being sold.

A2.24 Table A2.2 and Table A2.3 set out the customer acquisition information that we have used to allocate shared acquisition costs to the SFBB portfolio cost stack.

Table A2.2: BT New Acquisition Volumes in 2012/13 (000s)

	New Subscribers	% of total
Voice only	[✂]	[✂]
Voice + Copper BB	[✂]	[✂]
Voice + Copper BB + TV	[✂]	[✂]
Voice + Fibre BB	[✂]	[✂]
Voice + Fibre + TV	[✂]	[✂]
Total Subscribers	**[✂]**	**[✂]**

Source: BT[692]

[692] BT's response to 9th s26 Notice, Q5A, 28 February 2014.

Table A2.3: BT Regrade Volumes in 2012/13 (000s)

Previous Holding	New Holding	Regrades	% of total
Voice	Voice + Copper BB	[✂]	[✂]
Voice	Voice + Copper BB + TV	[✂]	[✂]
Voice	Voice + Fibre BB	[✂]	[✂]
Voice	Voice + Fibre BB + TV	[✂]	[✂]
Voice + Copper BB	Voice + Copper BB + TV	[✂]	[✂]
Voice + Copper BB	Voice + Fibre BB + TV	[✂]	[✂]
Voice + Fibre BB	Voice + Fibre BB + TV	[✂]	[✂]
Voice + Copper BB	Voice + Fibre BB	[✂]	[✂]
Voice + Fibre BB	Voice + Copper BB	[✂]	[✂]
Total Subscribers Regraded		**[✂]**	**[✂]**

Source: BT[693]

A2.25 Table A2.2 and Table A2.3 show that approximately [✂] per cent of BT Consumer customer acquisitions (including both new acquisitions and regrades) were to broadband bundles. Around [✂] per cent of BT's new acquisitions were to fibre broadband, while around [✂] per cent of BT regrades were to fibre bundles.

A2.26 Table A2.4 sets out the 2012/13 subscriber and subscriptions data relevant for the customer-based and product-based approaches to allocating ongoing incremental shared costs.

Table A2.4: BT Subscription Volumes in FY2012/13

	Q1 (000s)	Q2 (000s)	Q3 (000s)	Q4 (000s)	Average (000s)
Voice lines	[✂]	[✂]	[✂]	[✂]	[✂]
All broadband	[✂]	[✂]	[✂]	[✂]	[✂]
Copper broadband	[✂]	[✂]	[✂]	[✂]	[✂]
Fibre broadband	[✂]	[✂]	[✂]	[✂]	[✂]
TV	[✂]	[✂]	[✂]	[✂]	[✂]
Total products	[✂]	[✂]	[✂]	[✂]	[✂]

Source: BT[694]

A2.27 Table A2.4 shows that the average number of BT customers, as represented by the number of voice lines, in 2012/13 was [✂]. Approximately [✂] were subscribed to BT broadband ([✂]), with [✂] of these taking fibre broadband services. The

[693] BT's response to 9th s26 Notice, Q4, Q5 and Q5A, 21 February 2014 and 28 February 2014.
[694] BT's response to 6th s26 Notice, Q19, 2 October 2013.

average number of BT TV subscriptions was [✂]. This translates to an average of [✂] products being subscribed to in 2012/13. We note that the calculation assumes that each broadband customer takes voice from BT. We requested data on the number of broadband solus customers from BT, which showed that in 2012/13 the average number of such customers for the year was [✂].[695] As this only accounted for [✂] per cent of all BT broadband customers, we consider our assumption to be reasonable.

A2.28 The following subsection sets out the approach we have used to allocate each of the incremental shared cost items.

Method used to allocate each incremental shared cost

Customer service

A2.29 In 2012/13, BT Consumer spent approximately £[✂] on customer services.[696] About £[✂] of this amount consisted of ongoing costs as set out in Table A2.5.

Table A2.5: 2012/13 Customer Service ongoing costs

	(£M)
My Help & Support	[✂]
My Account	[✂]
My Value Added service	[✂]
Total Overheads	[✂]
Total	**[✂]**

Source: BT[697]

A2.30 BT allocated My Help & Support costs to broadband [✂].[698] It allocated 'My Account' and 'My Value Added' service costs on the basis of [✂] overhead costs to broadband, which consist of accommodation, computing and systems costs.

A2.31 In total, BT allocated around £[✂] of the £[✂] spent on ongoing customer service costs to its broadband customers and divided this by the average broadband base in 2012/13 to give a cost of £[✂] per customer month.

A2.32 Having reviewed BT's allocation, we noted that a large number of customer service costs were allocated to calls and lines, some of which are likely to be relevant to broadband as well (for example billing, enquiries and complaints). Furthermore, given that BT's Infinity offering is dual-play (and triple-play) and the cost stack includes call costs and revenues, it is not consistent to exclude voice from the allocation of customer service costs.

[695] BT's response to 9th s26 Notice, Q16, 21 February 2014.
[696] BT's response to 5th s26 Notice, Q7, 10 September 2013.
[697] BT's response to 5th s26 Notice, Q7, 10 September 2013, BT's response to 6th s26 Notice, Q13, 18 October 2013.
[698] BT's response to 5th s26 Notice, Q7, 10 September 2013, BT's response to 6th s26 Notice, Q13, 18 October 2013.

A2.33 As a result, for 'My Help & Support' costs we have allocated approximately [✂] per cent of the voice costs set out in BT's customer services product allocation model to broadband (in addition to the amount already allocated to broadband) on the basis that this proportion of voice customers takes broadband services. For 'My Account' and 'My Value Added' service costs we have applied the product based approach to allocate to broadband customers. We consider that this approach is appropriate as customer service costs are likely to vary according to the number of products a customer is subscribed to. This gives an ongoing monthly cost per broadband customer of £[✂] for dual-play bundles and £[✂] for triple-play bundles.

A2.34 We have also used the product based approach to allocate customer service overheads, again on the basis that there are unlikely to be significant economies of scope on the long run. This gives an ongoing monthly cost of £[✂] for dual-play bundles and £[✂] for triple-play bundles.

A2.35 Approximately £[✂] of total customer service costs are related to a function within BT's customer service centre that deals with product orders and account setup (known as 'My Order').[699] We have included this as an upfront cost by applying the customer based approach and spreading the costs over both new and regraded customers. The costs are driven by [✂] and so are unlikely to materially increase with the number of products taken. This adds an additional £[✂] to net acquisition costs.

Marketing

A2.36 BT Consumer's SG&A accounts reported marketing and sales spend of £[✂] in 2012/13.[700] The majority of this is spent on campaigns to win new customers or upsell existing customers (e.g. via television advertising, direct mail-outs, door drops, press and magazine advertising etc). We treat this spend as upfront acquisition costs.

A2.37 BT provided Ofcom with a breakdown of its 2012/13 marketing budget and its allocation by product, which is given in Table A2.6.[701] The different kinds of marketing activities can be described as follows:

- [✂] – target prospective customers with no billing relationship with BT;
- [✂] – target existing customers to upsell products and services;
- [✂] – target existing customers to reduce customer churn; and
- 'Non-campaign' – overheads such as data, retainer fees, PR and BT.com development.[702]

[699] As noted in paragraph A3.204 and A3.212, we assume that these costs also include £[✂] BT Sport upfront customer service costs in 2012/13.
[700] As noted in paragraph A3.204 and A3.209, we assume that these costs also include £[✂] BT Sport upfront marketing costs in 2012/13.
[701] BT's response to 5th s26 Notice, Q13, 10 September 2013.
[702] BT's response to 4th s26 Notice, Q9, 22 July 2013.

Table A2.6: BT Breakdown of 2012/13 Marketing Spend

Category	Spend (£m)	BT Allocation
[✂]	[✂]	[✂]
[✂]	[✂]	[✂]
[✂]	[✂]	[✂]
[✂]	[✂]	[✂]
[✂]	[✂]	[✂]
[✂]	[✂]	[✂]
Total	[✂]	

[✂]

[✂]

A2.38 As discussed below on customer retention costs, we have included an allocation of [✂] ongoing costs in our assessment.

A2.39 'Non-campaign' spend includes:

- retainer fees – [✂];
- CRM Customer insight – [✂];
- data – [✂];
- PR – [✂];
- BT.com development – [✂].[703]

A2.40 BT did not include these in its Model because it did not consider them product specific. However, we consider that in the long run, they would be lower if BT did not have a SFBB portfolio (the vast majority of customers of which also purchase voice), which is expected to grow rapidly in the coming years. We therefore include non-campaign marketing costs as an ongoing cost and allocate it using the product-based approach. This gives an ongoing customer cost of £[✂] per month for dual-play customers and £[✂] for triple-play customers.

[703] BT's response to 5th s26 Notice, Q13 and Q25, 10 September 2013.

A2.41 In relation to BT's allocation of [✂] spending, BT stated that a proportion of customers acquired in response to [✂] campaigns will sign up to broadband products such as Infinity.[704] Therefore we do not think it is appropriate to attribute [✂] per cent to voice services and [✂] to broadband. We have made an allocation based on new BT additions in 2012/13 (see Table A2.2), where broadband customers accounted for around [✂] per cent of new subscriptions. We therefore assume that around £[✂] of [✂] spend should be allocated to broadband and we divide this by [✂] broadband adds in the same year to get an upfront cost of £[✂] per customer.

A2.42 With regard to the [✂] spend, we have re-allocated this on the basis of BT's data on regrades (see Table A2.3), which shows that broadband accounts for [✂] per cent of all regrades. We therefore divide £[✂] by [✂] broadband regrades to derive an upfront cost per regraded customer of £[✂].

A2.43 In order to estimate the average marketing cost for a new SFBB customer we take a weighted average, with [✂]% weight given to new connections (as this was the proportion of BT's broadband acquisitions in 2012/13 that were new) and [✂]% weight given to regrades.[705] This gives an overall total upfront marketing cost of £[✂] per customer. Both types of marketing costs (for new customers and regraded customers) are allocated using the customer acquisition based approach as they are largely accounted for by spend on [✂]. We do not consider such spend will significantly vary per customer based on the number of products taken.

A2.44 In addition to the above marketing spend, BT's management accounts for 2012/13 include £[✂] of cost for 'affiliates/pay per click'. These relate to costs paid to online comparison sites (such as Moneysupermarket.com) and to search engines (such as Google) to support search results position.

A2.45 We gathered from BT information which provided a breakdown of search terms and payments to price comparison sites for different product lines (i.e. broadband, calls and TV).[706] For payments to comparison sites, we have included [✂] per cent of the voice-related payments in our estimate on the basis that [✂] of BT's voice customers take broadband. We then estimated the cost of acquiring a dual-play customer by adding this to broadband-related spend and dividing by the total number of dual-play acquisitions (including both new customers and regrades) in 2012/13. A similar approach was used for triple-play customers, which includes TV-related online comparison site costs.

A2.46 With regard to search term costs, BT provided a list of search terms for which it paid search engines in 2012/13. It also provided a breakdown of payments in relation to each search term listed.[707] We estimated the relevant cost for broadband, calls and TV by summing the costs of related terms (e.g. if the search term included 'broadband', 'internet' or 'Infinity' then it was included in our estimate for broadband costs). As with payments to price comparison sites, we allocated [✂] per cent of voice costs to our cost stack. We then estimated the cost per acquired customer using the same methodology as for payments to price comparison sites.

[704] BT's response to 4th s26 Notice, Q9, 22 July 2013.
[705] BT's response to 9th s26 Notice, Q4, Q5 and Q5A, 21 February 2014 and 28 February 2014.
[706] BT's response to 6th s26 Notice, Q26, 18 October 2013.
[707] BT's response to 6th s26 Notice, Q26, 18 October 2013.

A2.47 Based on this information, we calculated that the affiliates/pay per click cost was £[✂] per dual-play customer and £[✂] per triple-play customer.

Development

A2.48 In 2012/13, BT Consumer spent around £[✂] on 'development', which is activities that support the development of BT Consumer's product portfolios (e.g. development of new products, improving product functionality, improving customer experience etc).[708] This work is carried out by BT TSO [✂].[709]

A2.49 BT provided a breakdown of the Consumer division's development spend in 2012/13.[710] This included development spend on broadband, calls and lines centre and BT Vision centre. On the basis of its allocation to broadband, BT's Model included £[✂] of development cost per Infinity customer. It did not include any of its spend on calls and lines or TV in its allocation. We have therefore included approximately [✂] per cent of calls and lines development costs on the basis that this proportion of voice customers takes broadband. We have also included [✂] per cent of TV costs for triple-play packages, as TV cannot be purchased as a solus product. These adjustments result in a development cost of £[✂] per dual-play customer and £[✂] per triple-play customer.

A2.50 Regarding TV-related development costs, we note that in 2012/13 BT Consumer incurred a significant charge of £[✂], accounting for [✂] per cent of the total development budget. BT explained that this was driven by [✂]. It said that these were one-off costs and that none ([✂]) was capitalised.[711] We have therefore capitalised this cost over a period of five years to reflect the long-term nature of the investment.

Labour cost – sales and management

A2.51 In 2012/13, BT spent £[✂] on 'total labour costs' (TLC), which cover all headcount costs in the sales function and management functions for BT Consumer. BT estimated that the cost of its telesales function was £[✂] in 2012/13, with £[✂] spent on customer acquisition and £[✂] spent on the existing base. [✂] was spent on management functions and 'Outbound' activities. 'Outbound' activities captures a function that deals with complaints, manual processing of orders that have failed or cannot be placed automatically and call observation.[712] A breakdown of BT's 2012/13 TLC costs is provided in Table A2.7.

[708] As noted in paragraphs A3.204 and A3.214, we assume that these costs also include £[✂] BT Sport upfront development costs in 2012/13.
[709] BT's response to 5th s26 Notice, Q8, 16 September 2013.
[710] BT's response to 6th s26 Notice, Q14, 18 October 2013.
[711] BT's response to 7th s26 Notice, Q34, 13 December 2013.
[712] BT's response to 3rd s26 Notice, Q10, 3 July 2013.

Table A2.7: BT Breakdown of 2012/13 TLC Costs

Category	Spend (£M)
Telesales – acquisition	[✂]
Telesales – existing base	[✂]
Outbound	[✂]
Management	[✂]
Total	**[✂]**

Source: BT[713]

A2.52 In terms of acquisition activities, these include dealing with queries about services which may lead to sales and transaction calls to complete a purchase. For each BT Consumer product (voice, broadband and TV) BT provided the number of completed sales and an estimate of the number of seconds taken per sale. This information was used by BT along with labour costs and labour resource to estimate a cost per acquisition for each BT product.[714] For broadband, this was £[✂] in 2012/13, for voice it was £[✂] and for TV it was £[✂]. This translates to a cost per acquired dual-play customer of £[✂] and triple-play customer of £[✂].

A2.53 In terms of telesales activity related to BT's existing base, this includes upsell activities from functions such as the Home Movers, Support and Customer Options Teams (predominantly engaged in retention activity). We cover this in our estimate of customer retention cost below.

A2.54 With regard to the management function, BT provided a breakdown of the core units. This is presented in Table A2.8.

[713] BT's response to 3rd s26 Notice, Q10, 3 July 2013,
BT's response to 7th s26 Notice, Q35, 13 December 2013,
BT's response to 6th s26 Notice, Q4, 18 October 2013.
[714] BT's response to 6th s26 Notice, Q4, 18 October 2013.

Table A2.8: BT Breakdown of 2012/13 TLC Management Costs

Function	Spend (£M)	Description
Commercial	[✂]	Product and propositions
Customer experience	[✂]	Business improvement (e.g. improving online sales)
Marketing	[✂]	BT Retail's market department
Online	[✂]	BT.com management
BT TV	[✂]	BT TV commercial, production, scheduling, programmers
Sport	[✂]	Sport commercial, commercial sales, production, scheduling, programmers
Sales management	[✂]	Management of the Telesales Organisation
Strategy	[✂]	Internal strategy function
Other units	[✂]	
Total	**[✂]**	

Source: BT[715]

A2.55 We consider labour-related costs (for both management functions and 'Outbound' described above) to be variable and therefore incremental in the long run to SFBB. BT does not capture information or retain records relating to the proportion of these costs to customer acquisition and/or servicing BT's existing base.[716] Therefore, in the absence of such information, we treat these as ongoing costs and allocate them using the product-based approach, as a large proportion of the costs are likely to increase as customers take bundled services. This results in an ongoing cost per customer month of £[✂] for dual-play bundles and £[✂] for triple-play bundles.

Billing and Bad Debt

A2.56 The billing and bad debt line item in the management accounts captures all the costs of billing customers for BT Consumer products and of any bad debt incurred in serving the customer base. BT's Model did not include an explicit billing/bad debt item. However, given that BT will incur billing costs for every SFBB customer it supplies and will accumulate a certain amount of bad debt as a result of serving the SFBB customer base, we consider it to be a cost which should be included in the SFBB portfolio cost stack.

A2.57 We consider that billing costs are likely to be driven by the number of customers rather than the specific mix of products taken, whereas bad debt is likely to increase with the number of products a customer purchases. However, as BT's management accounts do not distinguish between the two, we have allocated a proportion to broadband based on the customer-based approach. This results in an ongoing cost of £[✂] per customer per month. If we were to use the product-based approach, the

[715] BT's response to 7th s26 Notice, Q35, 13 December 2013.
[716] BT's response to 7th s26 Notice, Q35, 13 December 2013.

overall portfolio cost would increase by £[✂]. We include this as a sensitivity to the results of our assessment of BT's margins in Section 7.

A2.58 We note TalkTalk's comment that Ofcom's central case should allocate bad debt and billing on the basis of the number of products sold (or better still in the case of bad debt, on the revenue of each product). TalkTalk considers it intuitive that the complexity of billing would increase with the number of products a customer takes (or revenue in the case of bad debt).[717] BT's management accounts do not report billing and bad debt costs separately so we are unable to distinguish between the two. Whilst we accept that bad debt costs are likely to be proportional to the revenues generated by a customer, we do not believe that billing costs would materially increase as a customer takes an additional product. We therefore consider that allocating billing and bad debt costs using the product approach would result in an over-estimate and so we maintain the customer-based approach but note that using the product-based approach would not change our overall conclusion.

Customer Retention

A2.59 There is no specific 'customer retention' item in the SG&A accounts or BT's Model. TalkTalk's complaint included an estimated £[✂]**[£0-£5]** for customer retention that included ad-hoc discounts, customer mail-outs and call outs.[718] Some of these costs are included under other items, for example BT's subscription price already includes a number of 'save' offers (see paragraph A1.39).

A2.60 We have included two specific costs under 'customer retention' as a result of our analysis of the cost information received from BT.

A2.61 The first relates to retention activities in BT's Telesales Centre, which includes 'Customer Options Team' (COT) and 'Home Mover' functions. This is covered in the £[✂] of spend outlined in Table A2.7. Staff employed in the COT function are predominantly engaged in retention activity for customers considering leaving BT while those in the Home Mover function mostly engage in retaining customers when moving home. BT estimated that around [✂] per cent of COT and Home Mover staff time was spent on such retention activity. We consider that this cost is likely to vary primarily according to the number of customers, so we took [✂] per cent of the COT and Home Mover labour cost, along with [✂] per cent of the support function that did not support sales, and calculated the monthly cost per customer using the customer based approach.[719] This gives a monthly cost of £[✂] per customer.

A2.62 We also included an allocation of BT's marketing spend on customer retention. BT estimated that around £[✂] of its marketing budget is spent on reducing customer churn ([✂] – see Table A2.6). BT allocated [✂] of this cost to broadband ([✂] to voice) and included it as an upfront cost in its Model.[720] Again we consider it appropriate to allocate this cost as an ongoing cost using the customer based approach, resulting in a monthly cost of £[✂] per customer. We note TalkTalk's comment that customer retention costs should reflect the number of products taken since BT is likely to spend more retaining customers who take more products, as

[717] TalkTalk's August submission (confidential), 28 August 2014, paragraph 5.3.
[718] TalkTalk complaint (confidential), 13 March 2013, page 94, paragraphs 373 to 374.
[719] BT's response to 3rd s26 Notice, Q10, 3 July 2013,
BT's response to 6th s26 Notice, Q4, 18 October 2013.
[720] BT's response to 5th s26 Notice, Q13, 10 September 2013.

they generate higher revenues.[721] The majority of retention costs are associated with telesales and [✂] such as [✂]. We do not consider these are likely to materially increase as customers take additional products and so we apply a customer based approach.

A2.63 We therefore include a total monthly retention cost of £[✂] per customer.

Other long run variable costs

A2.64 As outlined in Table A2.1, we also include a number of other shared costs in our LRIC estimate, including accommodation and IT costs.[722] We have allocated these costs using the product-based approach on the basis that we consider that such costs would likely be lower if BT did not serve its SFBB customers. This results in a cost of £[✂] per customer month for dual-play customers and £[✂] for triple-play customers.

BT TSO Costs

A2.65 BT Consumer's management accounts include two charges for BT TSO – BT TSO internal charges (£[✂]) and BT TSO fixed costs (£[✂]) – giving a total of £[✂]. BT provided the following list of responsibilities and activities undertaken by BT TSO:

- responsible for the lifecycle of BT's global networks and systems;
- manages BT's voice, data and TV networks and IT applications, which make up the core infrastructure of BT's products and services;
- designs and delivers the networks and platforms that are used by BT's Market Facing Units (MFUs), i.e. BT Retail, BT Global Services, BT Wholesale and BT Openreach;
- manages BT's long-term technology strategy and research and innovation programmes (including BT's worldwide patent portfolio); and
- manages BT Group's energy consumption.[723]

A2.66 BT TSO was launched in January 2013 by merging two former BT divisions, BT Operate (BTO) and BT Innovation and Design (BTID) (though it is not a simple sum of its former divisions as some parts of BTO and BTID moved to other lines of business).[724] Due to the fact that BT TSO does not trade with customers outside of BT Group, its costs are recharged to the market facing units (MFUs) and BT Group to reflect the services it provides to them. Costs include total labour costs, IT and network maintenance, accommodation and energy (including charges relating to the operational estate such as exchanges and data centres) and other external costs (e.g. consultancy, fleet and conferencing).[725]

[721] TalkTalk's August submission (confidential), 28 August 2014, paragraph 5.3.
[722] As noted in paragraph A3.204 and A3.210, we assume that these costs include £[✂] BT Sport upfront costs of building up the channel team in 2012/13
[723] BT's response to 5th s26 Notice, Q9, 10 September 2013.
[724] BT's response to 9th s26 Notice, Q18, 21 February 2014.
[725] BT's response to 7th s26 Notice, Q1-Q7, 6 December 2013.

A2.67 We requested detailed information on BT TSO's cost recovery in 2012/13. In response to this, BT explained that it categorises BT TSO-related costs into three broad categories depending on the main cost drivers behind the costs:

i) Direct – these costs are directly caused by an MFU. These include volume-based trades and specific contracts between BT TSO and the MFU (for example in 2012/13, BT TSO carried out various projects for BT Consumer such as [✂]).

ii) Indirect – these costs are indirectly caused by an MFU. These cover activities that BT TSO does for MFUs on a shared basis and where there is available usage data to calculate a trade (e.g. applications support and maintenance, IT support, product in-life support, infrastructure support).

iii) Fixed – these are shared BT Group costs that cannot be directly attributed to a MFU and are mainly related to BT-wide activities or to support of BT TSO activities. They include accommodation and energy and BT TSO overheads. Fixed charges to Openreach are based on how the corresponding costs are attributed in BT's published regulatory financial statements. [✂]. [726] [✂].

A2.68 BT provided data that showed that in 2012/13, BT TSO's total costs were around £[✂],[727] of which £[✂] was allocated to BT Consumer.[728] We requested a detailed breakdown of these charges in order to determine the proportion that could be considered incremental to BT Consumer's SFBB portfolio.

A2.69 The data showed that around £[✂] of BT TSO costs were direct trades that were incorporated into product-specific management accounts (e.g. the broadband and TV accounts). These are already included in our LRIC cost estimates, for example in platform and TV network costs. None of the remaining £[✂] was included in BT's Model.

A2.70 Having investigated the BT TSO charges not included in BT's Model, we found that just over £[✂] of direct trades are recorded in BT Consumer's development spend.[729] BT provided a detailed explanation of each cost item in its development accounts, which showed that the BT TSO charge was to support BT Consumer as well as fixed shared release costs (these are costs associated with the overall delivery of a software release that are not specifically related to the software's capability or functionality).[730] The remaining spend is reflected in the 'internal charges' and 'fixed costs' referred to in paragraph A2.65.

[726] BT's response to 7th s26 Notice, Q1-Q7, 6 December 2013,
BT's response to 9th s26 Notice, Q18, 21 February 2014.
[727] BT's response to 7th Notice, Q3, 6 December 2013.
[728] BT's response to 7th s26 Notice, Q4, 29 November 2013. The £[✂] excludes £[✂] related to BT security software.
[729] BT's response to 6th s26 Notice, Q14, 18 October 2013.
[730] BT's response to 7th s26 Notice, Q7, 29 November 2013.

A2.71 Having reviewed the information provided by BT, our view is that indirect BT TSO trades with BT Consumer are incremental to the SFBB portfolio in the long run. BT's approach to allocating BT TSO costs consists of identifying suitable cost drivers that allow it to attribute costs to the relevant MFU. In the case of indirect costs, BT has taken steps to identify the costs that are primarily driven by BT Consumer (hence why it is charged to that particular division). As BT Consumer is a cost driver, we consider it likely that these costs would be reduced if the BT Consumer business was significantly smaller. As discussed in Section 5, we expect SFBB to account for an increasingly significant proportion of BT Consumer's broadband business in the long run. Furthermore, on the basis that almost all broadband customers take voice and that all BT TV customers have BT broadband, we consider that indirect costs are incremental to the SFBB portfolio in the long run.

A2.72 Where BT is unable to identify an MFU cost driver (i.e. fixed trades that are not attributable to BT Openreach), BT recovers costs by using adjusted revenues. These costs are therefore not allocated based on a causal link, but are instead allocated to divisions based on the revenue of those divisions. We therefore consider it likely that such 'fixed trades' costs are common and non-attributable to a single MFU.

A2.73 Of the £[✂] of BT TSO costs that BT did not include in its Model, we consider that £[✂] of relevant trade costs should be included. This includes three indirect trades (application support and maintenance, contract and product in-line support and infrastructure support) and development spend on BT TSO teams that support BT Consumer. The following table presents an overall summary of BT TSO costs and an assessment of what we have included.

Table A2.9: BT Breakdown of 2012/13 TSO Costs

Cost item	Cost type	Spend (£M)	Description	Included in Ofcom LRIC?
Projects	Direct	[✂]	Specific projects and activities that are allocated to individual management accounts or have been included as part of BT's Development accounts.	Yes
Development	Direct	[✂]	These are TSO costs in BT's Development budget (as reported in its SG&A accounts) that BT did not allocate to SFBB.	Yes
Application Support and Maintenance	Indirect	[✂]	Providing fixes and fault repair on MFUs' applications and software as well as application support.	Yes
Contract & Product In-life Support	Indirect	[✂]	Costs associated with labour, subcontractors and third party support for contracts and products.	Yes
Infrastructure support	Indirect	[✂]	Third party vendor IT and network support maintenance contracts that relate to IT and network platforms.	Yes
Accommodation & Energy	Fixed	[✂]	Accommodation and energy costs relating to TSO office accommodation.	No
TSO Functions (Overheads)	Fixed	[✂]	Costs associated with central/business support units (e.g. HR, Finance, CEO) and residual costs associated with Global Infrastructure Services, Global Network Services and Architecture & Global Support Platform.	No
Total		**[✂]**		

Source: BT[731]

A2.74 In terms of the BT TSO costs that we consider to fall outside of LRIC, these include [✂]. As these support all lines of business within BT Group (including BT Wholesale and BT Global Services),[732] we consider it unlikely that fixed trade costs would materially fall if BT did not have a SFBB business at the retail level.

A2.75 We note TalkTalk's comments that it considers 'fixed' TSO costs to be variable as they will depend to a large degree on the level of other direct/indirect TSO costs, since the purpose of this central function is the support the other TSO staff/projects.[733] Whilst it is possible that fixed TSO costs are variable in the long-run, we do not consider them to be variable with respect to BT Consumer's SFBB portfolio as they are common to a large number of services across BT Group. The

[731] BT's response to 7th s26 Notice, Q1-Q7, 6 December 2013.
[732] It also includes BT Openreach but the charging method used by BT TSO strips out Openreach-related costs using data that underpins the regulatory financial statements.
[733] TalkTalk's August submission (confidential), 28 August 2014, paragraph 3.40.

fact that BT recovers fixed TSO costs by using adjusted revenues, as it is unable to identify a direct or indirect cost driver within a specific MFU, supports this view. We therefore do not consider it appropriate to include fixed TSO costs in a LRIC estimate of retail SFBB.

Cost Volume Elasticity Sensitivities

A2.76 The approach we have used in allocating shared costs is binary, in that we either consider a cost to be fully scalable or not incremental at all. It is possible that some cost items may fall between these two extremes.

A2.77 When considering the extent to which costs vary with volumes, Ofcom sometimes uses the concept of a Cost Volume Elasticity (CVE). This measures the percentage change in costs for a given change in volumes. A CVE of 1 means that costs are fully variable with volumes, whereas a CVE of 0 means that costs are invariant to changes in volumes. For example, suppose an operator sells 1 million products and incurs annual billing costs of £10 million. If the CVE of billing costs is 1, then increasing the number of products sold by 100 per cent (i.e. by another 1 million) would result in annual billing costs increasing by 100 per cent as well (i.e. an additional £10 million). If the CVE is 0.5, then a 100 per cent increase in volumes would result in a 50 per cent increase in billing costs (i.e. an additional £5 million). If the CVE is 0, then annual billing costs would not change. However, BT Consumer does not capture information or retain records that allow us to estimate CVEs of shared costs precisely.

A2.78 We note BT's concern that it considers Ofcom's binary treatment of costs to be highly conservative. BT argued that many of the SG&A costs within BT Consumer (for example customer service, billing systems and accommodation) will not be variable in a linear manner and that treating them as fully scalable is a significant over-simplification of how costs would differ with the size of BT's SFBB business.[734]

A2.79 We acknowledge that our binary approach to estimating the LRIC of shared costs is unlikely to be precise as many will be between 0 and 1. However, given that we cannot estimate CVEs with precision, and as there is no LRIC model underpinning the management accounts, we consider our approach to be both reasonable and practical. We note that some of the CVEs may be too high, and some may be too low, and will therefore have opposing effects on our overall calculation of BT's costs. For example, it could be argued that applying a CVE of 0 to fixed BT TSO costs is not appropriate as they may be at least partly scalable. On the other hand, assuming a CVE of 1 for costs we have categorised as 'long run variable' could be considered too high. As the magnitude of these costs are similar (£[✂] for fixed BT TSO costs and £[✂] for long run variable costs), the simplifying assumptions will tend to cancel out. For example, if the CVEs of fixed BT TSO costs and long run variable costs are 0.2 and 0.8 respectively, then the impact on the overall result is minimal. Although BT considers that our approach is likely to be conservative on the whole, we nevertheless consider that it is a reasonable approach in this case given the evidence available to us.

Plusnet

A2.80 Due to the fact that BT did not include a number of shared costs that we consider to be relevant to LRIC in its estimate of Infinity costs, in addition to the fact that our

[734] BT's August submission (confidential), 6 August 2014, paragraph 2.24

assessment of other shared costs was often higher than the estimate in BT's Model (e.g. for customer services and marketing), we estimated Plusnet's ongoing shared costs by applying an uplift. This was calculated by dividing our estimate of total downstream costs for BT's dual-play Infinity portfolio[735] by the non-shared 'direct' costs (i.e. call costs, network costs, portal fees, platforms and storage). We then multiplied this uplift by our estimate of Plusnet's direct costs to obtain a total downstream cost estimate.

A2.81 For upfront shared costs, we followed the same approach outlined in paragraph A1.25, that is we maintained BT's estimates for Plusnet if we found that BT's estimates for Infinity were reasonably reliable. Otherwise, we assume that the cost for Plusnet customers is the same as for Infinity customers.

Summary

A2.82 The following table summarises our assessment of monthly ongoing variable shared costs for each BT Infinity customer, as well as our allocation method. Our estimates are [✂] higher than BT's estimate of shared costs (which was £[✂]), which were mostly made up of overheads (see paragraphs A2.4 to A2.6), though we note that our estimate of customer service costs is [✂] higher due to BT not allowing for any allocation to voice and TV products (both of which are relevant to the SFBB portfolio).

Table A2.10: Monthly shared costs per SFBB customer

Cost	Allocation method	Dual-play	Triple-play	Total mix
Customer Service	BT breakdown	£[✂]	£[✂]	£[✂]
Development	BT breakdown	£[✂]	£[✂]	£[✂]
TLC – Management	Product	£[✂]	£[✂]	£[✂]
Billing and Bad Debt	Customer	£[✂]	£[✂]	£[✂]
Customer Retention	Customer	£[✂]	£[✂]	£[✂]
Non-campaign Marketing	Product	£[✂]	£[✂]	£[✂]
Customer service overheads	Product	£[✂]	£[✂]	£[✂]
Accommodation	Product	£[✂]	£[✂]	£[✂]
Other internal/external spend/recoveries	Product	£[✂]	£[✂]	£[✂]
People related costs	Product	£[✂]	£[✂]	£[✂]
IT spend	Product	£[✂]	£[✂]	£[✂]
Marketing platform spend	Product	£[✂]	£[✂]	£[✂]

[735] We did not include triple-play because Plusnet did not offer TV at the time under consideration.

Miscellaneous costs	Product	£[✂]	£[✂]	£[✂]
TSO – direct and indirect	Product	£[✂]	£[✂]	£[✂]
Total		£[✂]	£[✂]	£[✂]

A2.83 Table A2.11 summarises our assessment of upfront shared costs for each BT Infinity customer. Sales costs and affiliates/pay-per-click increase with the number of products whilst marketing and upfront customer service costs are allocated using the customer acquisition based approach. .

Table A2.11: Upfront shared costs per SFBB customer

Cost	Dual-play	Triple-play	Total Mix
Marketing	£[✂]	£[✂]	£[✂]
Affiliates/pay-per-click	£[✂]	£[✂]	£[✂]
TLC – Sales	£[✂]	£[✂]	£[✂]
Customer Service 'My order'	£[✂]	£[✂]	£[✂]
Total	**£[✂]**	**£[✂]**	**£[✂]**

Annex 3

BT Sport 'net costs'

Introduction

A3.1 In this Annex we present our assessment of BT Sport's cost and revenues for the period covering 2013/14 to 2015/16.

A3.2 In paragraphs 6.74 to 6.81, we outlined three potential approaches to the recovery of the net costs of BT Sport (the combinatorial approach and two types of allocation approach). We focus in this Annex on the first allocation and second allocation approaches to the recovery of the net costs of BT Sport, because whilst we have also identified the combinatorial approach as a potential alternative, for the reasons set out in Section 6 we consider that if BT passes on the basis of the first allocation and second allocation approaches, it would also pass on the combinatorial approach.

A3.3 As explained in paragraphs 6.74 to 6.81, in the assessment of BT's margins under the first allocation and second allocation approaches we have incorporated BT Sport costs and revenues as the net cost per SFBB subscriber per month. Under the first allocation approach we spread the costs based on the proportion of SFBB and SBB customers in BT's entire broadband base that is eligible to receive the 'free' BT Sport offer. Under the second allocation approach, we spread the costs based on the proportion of SFBB and SBB customers that take up the BT Sport offer. In this Annex, we have set out in detail how we have used the information on BT Sport's costs and revenues to calculate the BT Sport monthly net cost per SFBB customer that would need to be absorbed in BT's SFBB monthly 'headroom' under either of these allocation approaches. Following our analysis of this information, we have built a model that calculates the monthly net costs of BT Sport for the period from 2013/14 to 2015/16.

A3.4 As explained in paragraph 5.133, we are assessing BT's margins for a particular customer cohort. The offers to which BT Sport is relevant are the May 2013 offer (comprising the cohort of customers acquired in the period from 9 May 2013 to 3 January 2014) and the January 2014 offer (comprising the cohort of customers acquired in the period from 4 January 2014 to 31 January 2014). We therefore present our estimates of the BT Sport net costs per SFBB customer for the May 2013 and January 2014 offers separately.

A3.5 This Annex is divided into three subsections.

A3.6 In the first subsection, we set out the data sources we have used to carry out our analysis. We note that BT Sport was only launched in August 2013. Consequently, we have limited actual data available and have therefore incorporated in our assessment BT's internal forecasts of the BT Sport costs and revenues. As we explain below, during the course of this investigation BT provided to Ofcom two sets of its internal forecasts for BT Sport, one produced before the launch of BT Sport (the 'Launch Forecasts') and the other produced after the launch (the 'Updated Forecasts'). To the extent possible, we have assessed and verified BT's forecasts against other available evidence, such as historical data on BT Sport performance to date, independent forecasts or the terms set out in the agreements between BT and third parties.

A3.7 The second subsection sets out the detailed information on individual BT Sport cost and revenue items contained in different data sources, namely, BT's Launch and Updated Forecasts and others, such as BT's agreements with third parties in relation to BT Sport distribution.[736] We also explain in detail certain adjustments to the data on each cost and revenue item that we have considered appropriate in order to interpret different evidence available to us when assessing BT's offers under investigation. These are set out in more detail below, but include:

1) *Adjusting BT Sport cost and revenue forecasts to exclude future price increases or uncommitted costs that are not part of the BT Sport offer in the relevant time period.*

A3.8 In relation to BT Sport revenues, we have established that BT's internal revenue forecasts for BT Sport assume future price increases. For the reasons set out at paragraphs A3.38 and A3.68, we considered that such price increases are not relevant to the assessment of the margins of BT's current offers. Therefore, we have calculated the revenue, where relevant, on the basis of prevailing BT Sport prices.

A3.9 In relation to BT Sport costs, we established that BT's internal forecasts include uncommitted rights and programming costs, i.e. the costs in relation to content that currently is not part of BT Sport content line-up. As explained in paragraph A3.120, we have excluded such uncommitted or speculative costs from the assessment of BT's current offers.

2) *Taking into account the dynamics of BT Sport cost and revenue forecasts in calculating the monthly net costs of BT Sport that reflect the cost recovery sustainable over a longer term, i.e. over the relevant period of three years.*

A3.10 As explained in paragraph 6.52, BT Sport costs are expected to fall over time and revenues to increase. As noted in paragraph 6.53, in determining the monthly net costs of BT Sport that need to be absorbed in BT's SFBB monthly headroom, we considered the dynamics of BT Sport cost and revenues, in order to take into account BT's cost recovery that is sustainable over the relevant period, i.e. three years.

A3.11 In relation to BT Sport revenues, we have distinguished between the revenue that is ongoing and received on a monthly basis (e.g. monthly subscriptions) and the revenue that is one-off (e.g. activation fees). We note that the majority of the one-off revenues are incurred in the initial year of BT Sport. We also note that the ongoing revenues from BT Sport are, by contrast, forecast to increase over time, as BT builds up its BT Sport subscriber base. As explained in paragraph 6.56, in our assessment of BT Sport cost recovery and in particular in calculating the monthly net cost of BT Sport that needs to be recovered in BT's SFBB margins, we take account of any reasonable changes to revenues over the three year period. For this purpose, we have smoothed BT Sport revenues over time, by first, calculating the net present value of the revenue forecasts over the relevant period discounted to

[736] We noted that there were some minor discrepancies between certain revenue and cost items set out in BT's agreements with third parties and BT's internal documents (BT's Launch Forecasts, Updated Forecasts and other internal calculations). We have in our assessment taken the relevant item from BT's internal documents and calculations, rather than the agreements. We note that any such discrepancies are relatively minor, and that using the amounts referred to under the terms of the agreements would not change our conclusions. Where appropriate, we have adjusted annual amounts to reflect BT's financial year.

the start date,[737] and second, calculating constant monthly revenue of the equivalent net present value over the same period. This approach takes into account the time value of money, i.e. that the revenues received at later periods may have a lower present value than those revenues received more immediately.

A3.12 In relation to BT Sport costs, BT forecasts that it will incur higher costs in the first year than in subsequent years as it launches the BT Sport business. We have also considered it appropriate to distinguish between ongoing costs and the one-off costs that BT incurred in launching BT Sport (for more details see paragraphs A3.111 to A3.115). As set out in paragraph 6.52 we consider that these launch costs do not all need to be recovered in the first year of operation. We note that the one-off launch costs were assumed to be incurred either before the launch or in the initial year of BT Sport; therefore, they are assumed to be nil in the two subsequent years. By contrast, the monthly ongoing costs of BT Sport vary little over time. As explained in paragraph 6.56, we spread the one-off costs evenly over the three year period, and the rights payments evenly over the duration of rights. In relation to both the one-off costs and the payments for content rights, we take into account the timing of when these costs are incurred and any costs of capital that BT incurs when financing upfront payments. As with revenue, this involves first, calculating the net present value of costs, discounted to the start date,[738] and second, calculating constant monthly costs that would yield the same net present value over the same relevant period.[739]

A3.13 Throughout the second subsection, for each BT Sport cost and revenue item, we present tables showing the average monthly estimates for 2013/14, 2014/15 and 2015/16 as derived from BT's Launch Forecasts and Updated Forecasts, and taking into account the above adjustments, where relevant. [740] In addition, we have also presented our revenue estimates based on BT Sport actual take up over the period from the launch of BT Sport in August 2013 to January 2014. In terms of costs, audited accounting data on BT Sport costs was not available during the period of this investigation, however we have used the cost estimates in the most recently available BRF which is prepared on the same basis as BT's annual accounts.

A3.14 We note that these monthly BT Sport revenue and cost estimates differ depending on the data sources used to assess them. Therefore, in the third subsection we have considered which of the above detailed estimates presented in the second subsection, should be used in the assessment of BT's May 2013 and January 2014 offers in particular. As explained in paragraphs 6.67 to 6.70, we consider that in the assessment of BT's May 2013 and January 2014 offers, we should use different information on BT Sport costs and revenues. More particularly:

- *In relation to BT's May 2013 offer*, we based our analysis on what we consider to have been reasonable forecasts at the time of the launch of BT Sport. We have used BT's Launch Forecasts, subject to the adjustments set out in the second

[737] Assumed to be 1 August 2013 when the BT Sport channels were launched.
[738] In relation to the one-off launch costs, we estimate their net present value at the start of the financial 2013/14 year, i.e. 1 April 2013. In relation to the content distribution rights costs, the start date is assumed to be the date at which BT's rights to distribute particular content on BT Sport come into effect.
[739] As explained in paragraph 6.56, for the one-off costs, the relevant period is three years, while that for the rights costs is the duration of each set of rights.
[740] Note that all the figures presented in the tables are rounded to the nearest £100,000 or £10,000 for presentation purposes. In the analysis, we have used the actual figures that are not rounded.

subsection, where relevant, to the extent that we considered these forecasts to be reasonable.

- *In relation to BT's January 2014 offer*, we based our analysis on the most up-to-date information that was made available to us during the investigation. Therefore, in the assessment of BT's January 2014 offer, we have adopted the estimates of BT Sport costs as presented in [✂]. We have therefore adjusted these revenue forecasts to be aligned with the current performance of BT Sport, with reference to the revenues that BT actually received in December 2013 and January 2014, and made our own assumption about future growth over the period to the end of 2015/16 (the 'current performance adjusted scenario').

A3.15 Finally, we explain how we derived our estimates of the monthly net costs that should be recovered from the monthly margin of BT's average SFBB customer used in the assessment of both BT's May 2013 and January 2014 offers under the first and second allocation approaches. We consider that the 2013/14 average monthly figures are the most relevant to the period under investigation.

Data sources

A3.16 We have used a number of different sources in our analysis of BT Sport costs and revenues. These are detailed below.

BT Sport's Launch Forecasts[741]

A3.17 In the launch business case for BT Sport, BT set out the monthly forecasts of BT Sport subscriber numbers, costs and revenues for the period from July 2012 until March 2016 (the Launch Forecasts). These forecasts were produced by BT in early 2013. They were prepared for BT's internal purposes, prior to the launch of the BT Sport channels. We note that the Launch Forecasts for 2013/14 reflect the same values as the Bi-Annual Rolling forecasts (BRFs) of BT Sport for 2013/14 that BT submitted to Ofcom in June 2013.[742]

BT Sport's Updated Forecasts[743]

A3.18 BT updated their BT Sport forecasts following the launch of BT Sport (the Updated Forecasts). The Updated Forecasts contain similar information to the Launch Forecasts, but include updated forecasts of BT Sport subscriber numbers and revenues to reflect the actual BT Sport take-up just after the launch.[744] They also reflect the updated estimates for BT Sport costs. As with the Launch Forecasts, the Updated Forecasts were prepared for BT's internal purposes. The Updated Forecasts cover the period from 2013/14 until 2015/2016.

[741] BT's response to 5th s26 Notice, Q30, 23 August 2013,
BT's response to 6th s26 Notice, Q22, 15 October 2013,
BT's response to 6th s26 Notice, Q21, Q24 and Q25, 28 October 2013.
[742] BT's response to 3rd s26 Notice, Q19a and Q20, 24 June 2013.
[743] BT's response to 7th s26 Notice, Q11 and Q11A, 29 November 2013,
BT's response to 7th s26 Notice, Q13, 13 December 2013.
[744] BT's response to 7th s26 Notice, Q11 and Q11A, 29 November 2013. BT commented that the Updated Forecasts assume "*fewer standalone volumes*" than the Launch Forecasts, and take into account "*lower take-up of pubs than expected*".

BT Sport's actual take-up data[745]

A3.19 BT provided us with monthly actual BT Sport subscriber volumes from the announcement of its launch in May 2013 until January 2014. This data sets out the monthly BT Sport subscriber volumes on different distribution platforms. It distinguishes, where relevant, between BT Sport subscribers that pay a monthly subscription fee and those that take BT broadband and therefore receive BT Sport for free. For the latter customer group, it also distinguishes between existing customers and customers that are new to BT broadband.

BT sports rights spend

A3.20 In July 2013 and August 2013, BT provided us with its expenditure on sports rights[746] as estimated at the launch of BT Sport for the period from 2012/13 to 2018/19. This data specified for each set of rights, the total amount of fees to be paid as well as the period of the duration of the rights. The data distinguishes between committed and uncommitted spend.[747] In February 2014 BT provided us with an updated rights budget.[748] It also provided us with detailed monthly data on the cash payments for the content rights, for the period from August 2012 to June 2020.[749]

Other Sources

A3.21 We have used other sources to assess BT's forecasts and to understand BT's underlying assumptions of producing these forecasts, such as independent forecasts for BT Sport volumes and BT's agreements with third party providers, mostly in relation to transmission and distribution services for BT Sport.

BT Sport cost and revenues

A3.22 In this subsection, we assess the average monthly estimates for each revenue and cost item of BT Sport.

A3.23 In particular, we present the estimates of BT Sport average monthly revenues, based on BT's Launch and Updated Forecasts, and explain certain adjustments that we make to those figures, as set out in paragraphs A3.8 to A3.12. In addition, we present our estimates of BT Sport actual revenues, based on the take-up of BT Sport to date (see 'Actual Revenue'). As explained in paragraph A3.14, the actual revenues in December 2013 and in January 2014 have been used as the basis for the 'current performance adjusted scenario', which we set out in detail in the third

[745] BT's response to 6th s26 Notice, Q20, 04 October 2013,
BT's response to 6th s26 Notice, Q20 (amended), 15 October 2013,
BT's response to 6th s26 Notice, Q20, 21 October 2013,
BT's response to 7th s26 Notice, Q10, 06 December 2013,
BT's response to 8th s26 notice, Q1, 10 January 2014,
BT's response to 8th s26 notice, Q1, 10 January 2014,
BT's response to 9th s26 notice, Q19, 18 February 2014.
[746] BT's response to 4th s26 Notice, Q1, 8 July 2013; and BT's response to 5th s26 Notice, Q27 and Q28, 23 August 2013.
[747] The uncommitted spend relates to content rights that BT has not yet acquired but may acquire in the future.
[748] BT's response to 9th s26 Notice, Q25, 21 February 2014.
[749] BT's response to 9th s26 Notice, Q26, 25 February 2014.

subsection in the assessment of BT Sport net cost per SFBB customer in relation to its January 2014 offer.

A3.24 We also present the monthly average costs based on BT's Launch and Updated Forecasts. In addition, we have compared, where possible, these cost estimates with the charges BT agreed to pay to the third party service providers, as set out in the agreements between BT and these providers.

Revenues applicable to an EEO

A3.25 In this subsection we describe each BT Sport revenue item and set out the forecasts for each of these items that are relevant to the assessment of BT's current offers. As noted above, we have re-assessed some of BT's internal forecasts in order to exclude future increases in price.

A3.26 In addition to that, we have distinguished between the ongoing and one-off revenue from BT Sport. As explained in paragraphs A3.11, we spread the one-off revenue over the three year period.

Ongoing revenues

A3.27 Ongoing revenues are the recurring payments BT receives from selling the BT Sport channels. During the periods we are assessing, BT received direct revenues from its BT Sport channels from five different sources. These sources of direct revenues are:

- **Monthly subscription revenues from residential customers**. An important source of BT's revenue from selling the channels comes from residential Sky subscribers who take BT Sport (both in SD and in HD) but do not have BT broadband. These customers pay a monthly fee for BT Sport.

  In addition, while customers that do take BT broadband (and agree to re-contract for an additional 12 months) receive BT Sport in SD for free (either on the Sky TV or BT TV platforms), a proportion of these customers pay to receive BT Sport in HD. However, BT Sport HD is free for a year for those customers who signed up to BT Sport prior to 1 August 2013.[750]

- **Monthly sublicensing to Virgin Media**. BT sublicenses BT Sport to Virgin Media. £[✂].

- **Monthly sublicensing to Setanta in the Republic of Ireland**. BT also sublicenses BT Sport to Setanta in the Republic of Ireland. £[✂].

- **Monthly subscription revenues from commercial premises**. BT receives revenues from commercial premises that subscribe to BT Sport via the satellite distribution platform.

[750] BT's response to 4th s26 Notice, Q2, 10 July 2013.

- **Advertising**. BT, via Channel 4, sells advertising and sponsorship on the BT Sport channels, from which it makes additional monthly revenues.

A3.28 £[✂].[751]

A3.29 Customers are also able to watch BT Sport in Standard Definition via the BT Sport app or online, including BT Sport on demand. These services are available for free to all BT Sport customers that either take BT broadband or subscribe to BT Sport over the Sky platform, again resulting in no direct revenue for BT.[752] As these customers result in no direct revenues for BT, we do not consider them further in this Annex.

A3.30 In the following subsections, we explain in detail how we estimated BT's revenues from BT Sport based on BT's Launch and Updated Forecasts as well as the actual take-up of BT Sport.

Monthly subscription revenues from residential customers

A3.31 BT receives monthly subscription fees from those customers who subscribe to BT Sport over the Sky platform but do not have BT broadband.[753]

A3.32 During the period under investigation, the headline monthly price for customers who choose to watch BT Sport in SD via Sky TV is £12 including VAT.[754] Applying a VAT rate of 20 per cent,[755] the monthly fee excluding VAT is £10.

A3.33 BT also offers a BT Sport HD pack, for BT Sport subscribers on Sky and on BT TV[756] which costs an additional £3 per month, including VAT (or £2.50, excluding VAT). As explained previously, those customers that signed up to BT Sport HD channels before 1 August 2013, receive the HD pack for free for the first 12 months of their subscription.[757]

[751] BT's response to 7th s26 Notice, Q17, 13 December 2013.
[752] BT's response to 4th s26 Notice, Q2, 10 July 2013,
BT's response to 9th s26 Notice, Q35, 28 February 2014.
[753] In the context of this investigation, BT Broadband products exclude BT Business and Plusnet. We note that BT Sport is also available to Plusnet residential broadband customers via the Sky platform for £5.99 for the channels in SD, and for an additional £1.50 for the channels in HD (see BT's response to 9th s26 Notice, Q21, 28 February 2014). However, over the periods we investigated, BT's revenues from Plusnet broadband customers taking BT Sport were immaterial (see BT's response to 9th s26 Notice, Q23, 28 February 2014). Therefore, we have not considered these revenues in the further analysis.
[754] BT's response to 4th s26 Notice, Q2, 10 July 2013.
[755] [✂]; see BT's response to 9th s26 Notice, Q32, 28 February 2014.
[756] BT Sport in HD on BT TV is only available to those customers who have BT Infinity broadband.
[757] BT's response to 4th s26 Notice, Q2, 10 July 2013.

Launch Forecasts

A3.34 BT's Launch Forecasts included forecasts of direct revenue from residential subscribers.[758]

A3.35 In its forecasts, BT assumed that [✂] per cent of the residential subscribers to BT Sport in SD on Sky TV, as well as [✂] per cent of those subscribers that receive BT Sport in SD on BT TV[759] would take up the HD pack (including those that receive it for free for the first 12 months).[760]

A3.36 In these forecasts, BT also indicated details of the prices it assumed that would apply for different periods. [✂].

A3.37 On this basis, BT forecast average monthly revenues from residential subscriptions of £[✂] in 2013/14,[761] £[✂] in 2014/15 and £[✂] in 2015/16 in its Launch Forecasts.

A3.38 [✂].

A3.39 We have set out below the BT Sport residential subscription revenue forecasts on the basis of the volumes set out in BT's Launch Forecasts, and assuming no increase in current prices.[762] Our adjustment to the Launch Forecasts results in average monthly subscription revenues of £[✂] in 2013/14, £[✂] in 2014/15 and £[✂] in 2015/16.

Table A3.1: BT Sport forecast monthly revenues from residential subscriptions, based on Launch Forecasts

Residential subscriptions, monthly average	2013/14	2014/15	2015/16
BT Launch Forecast	£[✂]	£[✂]	£[✂]
Ofcom assessment – excluding price increases	£[✂]	£[✂]	£[✂]

[758] BT's response to 6th s26 Notice, Q21, Q24 and Q25, 28 October 2013.
[759] BT Sport in HD on BT TV is only available to those customers who have BT Infinity broadband.
[760] BT's response to 6th s26 Notice, Q21, Q24 and Q25, 28 October 2013.
[761] Note that for 2013/14 the monthly average revenues apply to the period August 2013 – March 2014, i.e. we calculate monthly average revenues based on the revenue forecasts for these 8 months, given BT Sport was launched on 1 August 2013.
[762] We have made no adjustments to the other assumptions that BT used in producing its residential subscription revenue forecasts. As we discuss in paragraph A3.35, BT assumed a [✂] per cent HD take up among subscribers on Sky TV that pay a monthly subscription fee as well as 'free' subscribers on Sky TV and BT TV. This also includes those customers that are eligible for the Early Bird offer of receiving HD for free. See BT's response to 6th s26 Notice, Q21, Q24 and Q25, 28 October 2013.

Updated Forecasts

A3.40 As noted above, BT has provided us with the actual volumes of BT Sport subscribers on the Sky platform that pay a monthly subscription fee. This data showed that the number of these subscribers was significantly below the Launch Forecasts.

A3.41 BT's Updated Forecasts reflect the [✂]. This [✂] BT's forecast monthly residential subscription revenue to £[✂] on average in 2013/14, £[✂] in 2014/15 and £[✂] in 2015/16. BT maintained the assumption that [✂] per cent of BT Sport subscribers will take BT Sport in HD.[763]

A3.42 We have considered both BT's volume and revenue forecasts and noted that the Updated Forecasts [✂].[764]

A3.43 We set out below the BT Sport residential subscription revenue forecasts on the basis of the volumes in BT's Updated Forecasts, assuming no increase in current prices and [✂] per cent HD take up. Our adjustment to the Updated Forecasts results in monthly average subscription revenues of £[✂] in 2013/14, £[✂] in 2014/15 and £[✂] in 2015/16.

Table A3.2: BT Sport forecast monthly revenues from residential subscriptions, based on Updated Forecasts

Residential subscriptions, monthly average	2013/14	2014/15	2015/16
BT Updated Forecast	£[✂]	£[✂]	£[✂]
Ofcom assessment – excluding price increases	£[✂]	£[✂]	£[✂]

Actual Revenue

A3.44 Based on the actual take-up numbers[765], BT Sport's current performance in relation to BT Sport subscribers [✂]. At the end of December 2013, the number of actual paying Sky subscribers was [✂].

[763] As BT explained in its response to 9th s26 notice, Q22a, 28 February 2014, "*[a] target of* [✂]*% take-up of HD was set up as an incentive to sales staff. This is set out in Cell B18 of the Channel Recurring tab in the file enclosed with BT's response to 6th s26 Notice, Q21, Q24 and Q25, 28 October 2013. It is BT's understanding that approximately* [✂]*% of Sky's TV base take up HD.*"
[764] Similarly, we excluded from our assessment [✂] which BT has included in its Launch Forecasts.
[765] BT's response to 9th s26 Notice, Q19, 18 February 2014.

A3.45 [✂], BT Sport's actual take up among customers that also take BT broadband services and receive the channels in SD for free ('free' subscribers) on the Sky TV and on the BT TV platforms [✂].

A3.46 The proportion of customers that generate direct revenue to BT by paying a monthly £3 HD subscription fee [✂]. As at the end of December, BT received £[✂] monthly HD revenues from BT Sport 'free' subscribers. [✂]. The actual HD revenues in January 2014 increased to £[✂]. [✂] behind BT's expected £[✂], based on the launch estimates, and £[✂] based on its revised estimates.

A3.47 Overall, BT received £[✂] ongoing monthly revenues from retailing BT Sport to the residential subscribers on the Sky TV and on the BT TV platform, in December 2013. The monthly revenue increased to £[✂] in January 2014.

Monthly sublicensing to Virgin Media

A3.48 BT has an agreement with Virgin Media to sublicense BT Sport on the Virgin Media platform.[766] The agreement is for [✂].

A3.49 Virgin Media and BT agreed fees for each BT Sport 'Premium Basic' subscriber (i.e. those customers who take the channel with the Virgin XL bundle) and Premium subscriber (i.e. those customers that subscribe to the standalone channels) on the Virgin Media platform. The monthly fee paid by Virgin Media to BT for each subscriber depends on the number of subscribers that month. The monthly fee for each Premium Basic subscriber ranges from £[✂] to £[✂] in the first year of the agreement, and from £[✂] to £[✂] the second and third years.[767] The monthly fee for each Premium subscriber ranges from £[✂] to £[✂].

A3.50 Based on the current pricing of Virgin Media and the availability of HD channels on the platform, [✂].[768]

A3.51 Virgin Media and BT [✂].

[766] BT's response to 5th s26 Notice, Q31, 23 August 2013.
[767] In those circumstances where the total number of Premium Basic subscribers is above [✂], the monthly fee per each Premium Basic subscriber could increase to £[✂] - £[✂].
[768] BT's response to 5th s26 Notice, Q31, 23 August 2013.

A3.52 As part of the wholesale agreement, [✂].[769]

Launch Forecasts

A3.53 BT signed its agreement with Virgin Media on 15 August 2013. Therefore, BT's Launch Forecasts, which were produced earlier, before the launch of BT Sport in August 2013, do not take account of these revenues from the wholesale of BT Sport to Virgin Media.

Updated Forecasts

A3.54 BT's Updated Forecasts include total revenue of £[✂] in 2013/14, £[✂] in 2014/15 and £[✂] in 2015/16 from wholesale to Virgin Media. In terms of subscriber numbers, BT indicated that it expects [✂] Premium Basic subscribers on the Virgin Media platform throughout the term of the agreement and [✂] Premium subscribers.[770] As such, on the basis of the terms of the agreement, BT expected to receive revenues [✂].

A3.55 We have compared BT's revenue forecasts against [✂]. Given that the agreement term started on 15 August 2013, we have adjusted [✂] to BT's financial year, which starts in April. Assuming that BT receives [✂], this would result in a total of £[✂] in 2013/14, £[✂] in 2014/15 and £[✂] in 2015/16.[771] This is equivalent to monthly average revenue of £[✂] in 2013/14, £[✂] in 2014/15 and £[✂] in 2015/16.

[769] We have assumed that any BT costs incurred in the delivery of the channels via the satellite signal and the provision of the viewing cards are included in the satellite distribution related cost estimates in BT's forecasts for BT Sport (see paragraphs A3.136 to A3.166).
[770] BT's response to 6th s26 Notice, Q23, 11 October 2013.
[771] Although there is a slight difference between our estimates and BT's forecasts in the first year, in 2013/14, it is because we assume that BT will receive revenues immediately as of 15 August 2013, i.e. at the start of the agreement term. [✂].

Table A3.3: BT Sport forecast monthly revenues from sublicensing to Virgin Media, [✂]

Virgin Media revenues, monthly average	2013/14	2014/15	2015/16
BT Updated Forecast	£[✂]	£[✂]	£[✂]
Ofcom assessment – no adjustment	£[✂]	£[✂]	£[✂]

Actual Revenue

A3.56 BT has provided us with information on the actual number of subscribers, both Premium and Premium Basic, on the Virgin Media platform from August 2013 to January 2014.[772] Based on this data, it does not appear that the revenue from Virgin Media [✂].[773] Since the start of the agreement term, the number of Premium Basic subscribers has remained just below BT's forecast of [✂] subscribers. As at the end of January 2014, Virgin Media also had approximately [✂] Premium subscribers to BT Sport. The monthly fees calculated on the basis of the actual subscriber volumes were no larger than £[✂] throughout the period, i.e. [✂]. In the period to date, therefore, BT [✂].

Monthly sublicensing to Setanta in Republic of Ireland

A3.57 BT wholesales BT Sport 1 and BT Sport 2 to Setanta in the Republic of Ireland. Setanta bundles the BT Sport channels with other channels and sets the pricing for its customers.

A3.58 The agreement between BT and Setanta is for a three year period from August 2013, [✂].[774] [✂], BT would receive from Setanta €[✂] in the first year, paid on a monthly basis in equal instalments of €[✂] , €[✂] in the second year and €[✂] in the third year.[775]

A3.59 [✂], each month Setanta pays a monthly charge to BT ("subscriber fee"), relating to the number of channel subscribers. This fee depends on the platform over which the channel is distributed and is based on the number of subscriptions via a particular platform each month [✂].

[772] BT's response to 6th s26 Notice, Q20, 4 October 2013.
BT's response to 6th s26 Notice, Q20, 21 October 2013.
BT's response to 7th s26 Notice, Q10, 6 December 2013.
BT's response to 8th s26 Notice, Q1, 10 January 2014.
BT's response to 8th s26 Notice , Q1, 20 January 2014.
BT's response to 9th s26 Notice, Q19, 18 February 2014.
[773] In August 2013, there were [✂] Virgin subscribers which increased to [✂] subscribers in January 2014, compared with BT's forecast of [✂] subscribers for each month.
[774] BT's response to 7th s26 Notice, Q18, 17 December 2013.
[775] In the subsequent years (i.e. from the second year), [✂]. BT's response to 7th s26 Notice, Q18, 17 December 2013.

Launch Forecasts

A3.60 BT entered into the agreement with Setanta on 21 June 2013. Therefore, BT's Launch Forecasts, which were produced before the launch of BT Sport in August 2013, do not take account of these revenues.

Updated Forecasts

A3.61 BT has not provided us with volume forecasts of subscribers to BT Sport on Setanta. However, BT confirmed that its revenue forecasts were calculated on the basis that throughout the term, [✂].[776] In addition to that, BT stated that [✂], it had applied the "prevailing exchange rate at the time, which was approximately €1.18 to £1."[777]

A3.62 Based on BT's Updated Forecasts, BT expected to receive a total of £[✂] in 2013/14, £[✂] in 2014/15 and £[✂] in 2015/16 from Setanta. This is equivalent to monthly average revenue of £[✂] in 2013/14 and in 2014/15 and £[✂] in 2015/16.

A3.63 In our calculations, we have assumed that BT's revenues from Setanta will [✂]. We have also considered that BT's application of the prevailing exchange rate at the time when the agreement was signed is reasonable. On this basis, we make no adjustment to BT's Updated Forecasts for Setanta revenues for the purpose of our analysis.

Table A3.4: BT Sport forecast monthly revenues from sublicensing to Setanta in Republic in Ireland, [✂]

Setanta revenues, monthly average	2013/14	2014/15	2015/16
BT Updated Forecast	£[✂]	£[✂]	£[✂]
Ofcom assessment – no adjustment	£[✂]	£[✂]	£[✂]

Actual Revenue

A3.64 BT confirmed that as at August 2013, it received the revenues from Setanta [✂]. [✂].[778] Therefore in the period to date, we have assumed that BT [✂].

<u>Monthly subscription revenues from commercial premises</u>

A3.65 BT distributes BT Sport to pubs, clubs, hotels and other commercial premises. BT Sport is only available to commercial premises via the Sky platform. There is no need for the premises to have a subscription to BT TV or BT broadband.[779] [✂]. BT lists the starting fee as £60 on its website.[780] [✂].

[776] BT's response to 9th s26 Notice, Q24, 28 February 2014.
[777] BT's response to 9th s26 Notice, Q24, 28 February 2014.
[778] BT's response to 6th s26 Notice, Q20 (amended), 15 October 2013.
[779] BT's response to 4th s26 Notice, Q2, 10 July 2013.
[780] https://btsportbusiness.com/ viewed on 5 June 2014.

Launch Forecasts

A3.66 In its Launch Forecasts, BT estimates the average monthly revenues from commercial premises as being £[✂] in 2013/14, £[✂] in 2014/15 and £[✂] in 2015/16.

A3.67 BT's estimates of revenues from commercial premises show that BT forecasts the average revenue per user (ARPU) as being £[✂] at the end of its current financial year, in March 2014, £[✂] in March 2015 and £[✂] in March 2016.[781] It also shows that BT anticipates that ARPU would increase by [✂] and by an additional [✂].[782]

A3.68 For the purpose of assessing BT's margins on its current offers, as with the BT Sport revenues from residential subscriptions, we have adjusted BT's revenue forecasts from commercial premises to exclude the estimated increases in the ARPU [✂] . Once the ARPU increases are removed, the average monthly commercial revenues are adjusted to £[✂] on average in 2013/14, £[✂] in 2014/15 and £[✂] in 2015/16.

Table A3.5: BT Sport forecast monthly revenues from commercial premises based on Launch Forecasts

Commercial Revenues, monthly average	2013/14	2014/15	2015/16
BT Launch Forecast	£[✂]	£[✂]	£[✂]
Ofcom assessment – excluding ARPU increases	£[✂]	£[✂]	£[✂]

Updated Forecasts

A3.69 In its Updated Forecasts, BT estimated [✂] from commercial premises [✂], at £[✂] on average in 2013/14, £[✂] in 2014/15 and £[✂] in 2015/16. It also broke down its revenue forecasts[783], [✂].[784]

[781] BT's response to 6th s26 Notice, Q24b, 28 October 2013.
[782] We compare May and August prices in order to avoid seasonal variation of revenue during summer, in June and in July.
[783] [✂], BT's response to 7th s26 Notice, Q16, 13 December 2013.

[784] [✂], BT's response to 7th s26 Notice, Q16, 13 December 2013.

A3.70 BT also provided volume and ARPU forecasts for [✂], which show that [✂] of commercial customers in [✂] and in [✂]. Although such detailed information is not available for 'Groups', the revenue forecasts for this customer segment [✂]. Therefore, we have assumed [✂].[785] We estimate that the [✂] in the Updated Forecasts results in an [✂].

A3.71 Again, in the assessment of BT's current offers, we do not consider it appropriate to assume a future increase in ARPU, and we have reassessed BT's revenue forecasts accordingly. Our adjustment to the Updated Forecasts results in average monthly commercial revenues of £[✂] in 2013/14, £[✂] in 2014/15 and £[✂] in 2015/16.

Table A3.6: BT Sport forecast monthly revenues from commercial premises based on Updated Forecasts

Commercial Revenues, monthly average	2013/14	2014/15	2015/16
BT Updated Forecast	£[✂]	£[✂]	£[✂]
Ofcom assessment – excluding ARPU increases	£[✂]	£[✂]	£[✂]

Actual Revenue

A3.72 [✂].

A3.73 In December 2013, BT received £[✂] monthly revenues from its commercial BT Sport subscribers. These revenues increased to £[✂] in January 2014. The actual revenues in January were [✂].

A3.74 BT also provided us with the actual volumes of subscriptions from commercial premises. The number of commercial subscribers was growing over time, from [✂] at the launch of BT Sport (i.e. as at the end of August 2013), to [✂] as at the end of January 2014. Therefore, although covering a relatively short period in time, BT Sport actual volumes of commercial premises do not seem inconsistent with BT's volume forecasts at launch, which predicted that [✂] premises will take BT Sport at launch in August 2013 and [✂] premises in January 2014.[786]

[785] As before, we calculate the increase in ARPU by comparing May and August estimates each year, in order to avoid distortion due to seasonal variation. We then estimate the overall ARPU growth, by attributing revenue-based weights to the ARPU changes for different customer segments.
[786] Complete volume forecasts were not available in BT's Updated Forecasts therefore similar comparison was unavailable.

A3.75 Based on these figures, we calculated the ARPU as £[✂] in December 2013, and £[✂] in January 2014. BT's Launch Forecasts,[787] forecast the ARPU for those months to be £[✂] and £[✂], respectively. This suggests that BT's actual ARPU from commercial premises was [✂].

Advertising

A3.76 BT obtains revenues from advertising on BT Sport. BT explained that it does not have direct commercial agreements with advertisers for BT Sport. Instead, Channel 4 acts as an 'agent' for BT Sport selling airtime and sponsorship across BT's channels to media agencies and directly to clients.[788]

Launch Forecasts

A3.77 BT's Launch Forecasts estimated average monthly advertising revenues of £[✂] in 2013/14, £[✂] in 2014/15 and £[✂] in 2015/16. We have not made any adjustments to these BT forecasts.

Table A3.7: BT Sport forecast monthly advertising revenues, based on Launch Forecasts

Advertising revenues, monthly average	2013/14	2014/15	2015/16
BT Launch Forecast	£[✂]	£[✂]	£[✂]
Ofcom assessment – no adjustment	£[✂]	£[✂]	£[✂]

Updated Forecasts

A3.78 BT's Updated Forecasts revised these average monthly advertising revenues to £[✂] in 2013/14, £[✂] in 2014/15 and £[✂] in 2015/16. BT explained that it [✂].[789] As with BT's Launch Forecasts, we have not made any adjustments to BT's Updated Forecasts of the revenue from advertising on BT Sport.

[787] Complete ARPU estimates were not available in BT's Updated Forecast therefore similar comparison was unavailable.
[788] BT's response to 6th s26 Notice, Q20c, 15 October 2013.
[789] BT's response to 7th s26 Notice, Q11 and Q11A, 29 November 2013.

Table A3.8: BT Sport forecast monthly advertising revenues, based on Updated Forecasts

Advertising revenues, monthly average	2013/14	2014/15	2015/16
BT Updated Forecast	£[✂]	£[✂]	£[✂]
Ofcom assessment – no adjustment	£[✂]	£[✂]	£[✂]

Actual Revenue

A3.79 Based on the actual take-up of BT Sport,[790] as at December 2013, [✂] had entered into [✂] agreements to advertise or sponsor on BT Sport. This [✂] to [✂] agreements by the end of January 2014. BT's monthly revenue from these agreements was £[✂] in December 2013 and £[✂] in January 2014. We note that since August 2013, [✂]. The average monthly revenues over the period from August 2013 to January 2014 were £[✂].

A3.80 We note that the actual average revenues from August 2013 to January 2014 [✂]. Based on actual data to date, BT's Launch Forecasts [✂] advertising revenue in 2013/14.

Total ongoing revenue

A3.81 In this Annex we summarise BT's total ongoing monthly revenues from the BT Sport channels, derived from its Launch Forecasts[791] and Updated Forecasts, as explained in detail above. We compare our estimates with BT's estimates to show the impact of any adjustments we considered appropriate.

Launch Forecasts

A3.82 We have made some adjustments to the average monthly revenues in BT's Launch Forecasts for BT Sport, as shown in Table A3.9.

A3.83 Whilst we use the same estimates as BT for the revenues from Virgin Media and Setanta ([✂]) as well as advertising, we have re-assessed BT's forecasts of revenues from monthly residential subscriptions and commercial premises.

[790] BT's response to 9th s26 Notice, Q19, 18 February 2014.
[791] Note that the estimates of total ongoing revenue from BT Sport based on Launch Forecasts include [✂]. As explained in A3.28, in its Launch Forecasts BT expected to receive revenues [✂].

A3.84 In particular, the forecast monthly residential subscription revenues differ between Ofcom and BT because while we have based our estimates on BT's volume forecasts, we have assumed no increase in prices [✂]. Similarly, Ofcom estimates of subscription revenues from commercial premises are based on BT's revenue forecasts but excluding any increases in the ARPU, resulting in a difference between our forecasts and those of BT.

Table A3.9: BT Sport forecast monthly revenues, total ongoing, based on Launch Forecasts

Ongoing revenues, total, monthly average	2013/14	2014/15	2015/16
BT Launch Forecast	£[✂]	£[✂]	£[✂]
Ofcom assessment – excluding price/ARPU increases	£[✂]	£[✂]	£[✂]

Updated Forecasts

A3.85 As with the Launch Forecasts, we adjust BT's estimates in the Updated Forecasts to remove unannounced price or ARPU increases which BT accounts for in its forecasts.

Table A3.8: BT Sport forecast monthly advertising revenues, based on Updated Forecasts

Ongoing revenues, total, monthly average	2013/14	2014/15	2015/16
BT Updated Forecast	£[✂]	£[✂]	£[✂]
Ofcom assessment – excluding price/ARPU increases	£[✂]	£[✂]	£[✂]

Actual Revenue

A3.86 Based on the actual take-up of BT Sport,[792] we estimate that in December 2013, BT received total £[✂] of ongoing monthly revenues from BT Sport retail, wholesale and advertising services. In January, they were £[✂]. This is [✂] of BT's forecasts.

One-off revenues

A3.87 BT also receives one-off revenues from the BT Sport offer. Unlike ongoing revenues, these one-off revenues are not paid to BT on a regular basis, e.g. each month. Instead, these revenues are paid to BT once, when it acquires a new subscriber to BT Sport.

[792] BT's response to 9th s26 Notice, Q19, 18 February 2014.

A3.88 As we explain below, the one-off fees are charged for the provision of any access cards, equipment and installation services that are required to set up a new to BT Sport subscriber. Based on BT's forecasts, BT expects [✂]. Therefore, it would receive [✂], i.e. 2013/14. As explained in paragraph A3.11, in order to assess the underlying cost recovery that is sustainable over longer term, we spread the one-off revenues over a three year period. In doing so, we take into account discounting.

A3.89 As explained in paragraph A3.11, for this purpose, we first discounted the flow of the one-off revenues to the start date (the launch of BT Sport on 1 August 2013).[793] We then calculated the constant monthly revenue stream that generates a Net Present Value (NPV) (as at 1 August 2013) over the relevant time period equal to the NPV (as at 1 August 2013) of the one-off revenue forecasts to be received by BT.

A3.90 We outline the different one-off revenues that BT receives as a result of BT Sport below.

Provisioning revenues from residential customers on Sky

A3.91 There is a one-off activation fee of £15 including VAT (£12.50 excluding VAT) paid by those customers that take BT Sport over the Sky platform but are not taking BT broadband.[794] For customers on the Sky platform that do agree to subscribe to BT broadband the £15 activation fee is waived.

A3.92 As with the ongoing subscription revenue, we have calculated the forecasts of the provisioning revenues based on BT's volume forecasts, and a current activation fee per new BT Sport subscriber that does not take BT broadband services. This ensures that the provisioning revenue forecasts do not take into account any future price rises that are not part of the BT's offers under investigation. We note that our estimates based on BT's volume forecasts and the current activation fee presented below in paragraphs A3.93 and A3.94 are slightly lower than the estimates presented in BT's Launch and Updated Forecasts (a total of £[✂] and £[✂], respectively). However, the discrepancy between our estimates and BT's estimates is very minor and using BT's higher estimates would not change our conclusions.

Launch Forecasts

A3.93 Based on BT's volume forecasts in its Launch Forecasts, the total provisioning revenue over the period from 2013/14 to 2015/16 would be £[✂]. This equates in NPV terms to £[✂] per month over 32 months to the end of 2015/16.

Updated Forecasts

A3.94 Based on BT's volume forecasts in its Updated Forecasts (which projected lower take-up among 'paying' Sky subscribers), the total provisioning revenue over the period to 2015/16 would be £[✂]. This equates in NPV terms, to £[✂] per month over 32 months to the end of 2015/16.

[793] For this we have used the estimate of BT's pre-tax nominal weighted average costs of capital (WACC) for the Rest of BT in Ofcom's 2013 BCMR Statement, as explained in paragraph A1.230.
[794] BT's response to 4th s26 Notice, Q2, 10 July 2013.

Actual Revenue

A3.95 As explained in paragraph A3.44, the actual provisioning revenues since the launch of the BT Sport channels [✂]. As explained in paragraph A3.92, based on the actual take-up,[795] we estimate that from May 2013 to January 2014 BT received a total of £[✂] revenue from the provisioning fee, compared to Launch Forecast of £[✂] and Updated Forecast of £[✂]. These actual provisioning revenues equate in NPV terms to £[✂] per month over the period of 32 months.

Activation card revenues from residential customers on DTT

A3.96 Customers that choose to watch BT Sport via the DTT platform would need to pay a £10 one-off fee[796] for the activation card.[797]

A3.97 BT explained that this fee was waived where customers "switched to BT Sport". It also assumed no revenues from these fees in the forecasts for BT Sport.[798]

A3.98 In line with BT's assumptions in producing BT Sport forecasts we have assumed that BT receives no revenues from the activation cards.

Satellite equipment and installation fees from commercial customers on Sky

A3.99 BT also receives revenues for providing a Sky box, satellite or cabling to commercial customers on Sky, by charging £286.20 for the satellite equipment and standard installation. However, BT offers a free box and standard installation via BT's partner [✂] if the premises sign up to at least a 12 month contract for BT Sport.[799]

A3.100 BT has not provided us with separate equipment and installation revenue forecasts from commercial customers. It explained, [✂].[800] We also assume that there is no revenue stream from this source in our calculations.

Voice, broadband and TV revenues incremental to BT Sport

A3.101 In its Launch and Updated Forecasts, BT estimates the additional revenues it receives from voice, broadband and TV subscribers as a result of BT Sport. These revenues are the margins BT earns on incremental voice, broadband and TV customers whom BT gains as a result of the BT Sport offer.

[795] BT's response to 9th s26 Notice, Q19, 18 February 2014
[796] BT's response to 4th s26 Notice, Q2, 10 July 2013.
[797] This option is no longer available to customers that subscribed to BT Sport after 26 January 2014.
[798] BT's response to 9th s26 Notice, Q28, 14 February 2014. We note that BT did report the underlying costs of the provision of the DTT cards in their forecasts, together with other DTT related costs.
[799] BT's response to 4th s26 Notice, Q2, 10 July 2013.
[800] BT's response to 9th s26 Notice, Q27a, 28 February 2014. We note that the underlying costs were reported by BT in their forecasts 'Misc' cost item for commercial premises.

A3.102 We have excluded these margins from incremental voice, broadband and TV customers in our estimates of BT Sport revenues. As explained in Annex 1, we consider that such margins would already be reflected in the monthly SFBB headroom calculation, if appropriate. Accordingly, we exclude revenues from these incremental subscribers from the calculation of the BT Sport 'net costs', as including them would result in double-counting.

Total BT Sport revenues applicable to an EEO

A3.103 We have calculated monthly BT Sport revenue as a sum of ongoing and one-off revenues that are converted to a constant monthly equivalent in NPV terms. The monthly BT Sport revenues based on the Launch Forecasts, the Updated Forecasts and our adjustments to those forecasts are presented in the tables below.

Table A3.11: BT Sport forecast monthly revenues, total, based on Launch Forecasts

Total revenues, monthly average	2013/14	2014/15	2015/16
BT Launch Forecast	**£[✂]**	**£[✂]**	**£[✂]**
Ofcom assessment, total	**£[✂]**	**£[✂]**	**£[✂]**
Ongoing	£[✂]	£[✂]	£[✂]
One-off (converted to constant monthly)	£[✂]	£[✂]	£[✂]

Table A3.12: BT Sport forecast monthly revenues, total, based on Updated Forecasts

Total revenues, monthly average	2013/14	2014/15	2015/16
BT Updated Forecast	**£[✂]**	**£[✂]**	**£[✂]**
Ofcom assessment, total	**£[✂]**	**£[✂]**	**£[✂]**
Ongoing	£[✂]	£[✂]	£[✂]
One-off (converted to constant monthly)	£[✂]	£[✂]	£[✂]

A3.104 As explained in paragraph A3.14, given that we are assessing BT's margins of its SFBB offers including BT Sport over the period from 9 May 2013 to 31 January 2014, we consider that we should base our analysis on the net cost estimates for 2013/14.[801] This would most closely reflect the costs of BT's SFBB business over the period under investigation.

A3.105 However, as shown in Table A3.11 and Table A3.12, based on BT's forecasts, BT Sport revenue was projected to grow over time. Therefore, it would be more difficult for BT to pass our assessment of its SFBB profitability based only on revenues in the first year of BT Sport. As explained in paragraphs 6.50 and 6.51, this may lead

[801] BT's financial year 2013/14 starts 1 April 2013 and ends 31 March 2014.

to us finding a lower or negative margin which may not accurately reflect the long term profitability of BT's investment in BT Sport.

A3.106 As explained in paragraphs 6.56 and A3.11, we have decided to smooth the revenues over time, taking into account reasonable increases in BT Sport revenues over the period under consideration. For this purpose, we first use the monthly revenue forecasts to calculate the NPV of the BT Sport revenue flow over the relevant period, discounted to the start date, i.e. the launch of BT Sport on 1 August 2013. We then estimate the stream of constant monthly revenues from August 2013 to March 2016 that would result in the same NPV if discounted back to 1 August 2013. In contrast to simple averaging, our approach to smoothing revenues over time takes into account discounting, i.e. the fact that the value of cash received in the later periods has a lower present value than cash received immediately.

A3.107 Based on BT's Launch Forecasts, BT Sport revenue was projected to grow from average monthly revenues of approximately £[✂] in 2013/14 to average monthly revenues of approximately £[✂] in 2015/16. BT Sport would generate £[✂] total direct revenue cash flow over the period to 2015/16, the present value of which as at 1 August 2013 would have been £[✂]. This would be equivalent to a stream of constant monthly revenue of £[✂] for 32 months from August 2013 to March 2016.

A3.108 Based on BT's Updated Forecasts, BT Sport average monthly revenue was expected to increase from approximately £[✂] in 2013/14 to £[✂] in 2015/16, generating £[✂] of revenue in total over the period to March 2016. This would be equivalent to £[✂] constant monthly revenues for 32 months from August 2013 onwards in NPV terms.

A3.109 Finally, we note that BT Sport actual revenue in January 2014, assuming that the one-off revenues are spread over the period of 32 months, was £[✂]. The actual monthly revenues between August 2013 and January 2014 were £[✂] on average. They were approximately £[✂] below the average monthly revenues for 2013/14, based on the Launch Forecasts, and approximately £[✂] the average monthly revenues for 2013/14 based on the Updated Forecasts. We consider the implications of this further at paragraphs A3.248 to A3.282 below where we consider the data that we should use in the assessment of the January 2014 offer.

Costs applicable to an EEO

A3.110 In this subsection we assess BT's costs of providing BT Sport.

Ongoing vs. one-off costs

A3.111 The costs of BT Sport can be broadly broken down into the costs of content, the costs of transmission and distribution of the channels, and SG&A costs that support the BT Sport business. As set out below, some of these costs are ongoing, and some of them are one-off. BT's Launch Forecasts and Updated Forecasts do not distinguish between ongoing costs and one-off costs. However, both forecasts suggest that for certain items, BT incurred some costs before the launch of BT Sport, in 2012/13. We also note that the estimated costs for certain items in the first year of BT Sport (2013/14) are significantly higher than those in the last reported year (2015/16).

A3.112 As explained in paragraphs 6.50 to 6.51, we consider that these relatively higher costs in the first year, as well as any costs that BT incurred prior to the launch of BT Sport, are likely to reflect the fact that BT has launched a new business. As such, BT incurs costs of setting up the distribution of BT Sport via its own platform or platforms of other providers, in addition to the ongoing distribution of the channels. BT also needs to build its subscriber base and accordingly would invest more in its SG&A activities, such as marketing and sales. We consider that requiring BT to recover these higher costs in 2013/14 could penalise BT for the fact that BT Sport is in its launch phase. We therefore consider that in calculating the monthly net cost of BT Sport that needs to be recovered in BT's SFBB margin, it is appropriate to assess these one-off launch costs over a longer time horizon than the first year, by spreading them over a three-year period.[802]

A3.113 In our analysis we have assumed that:

i) Any costs incurred prior to the launch of BT Sport, i.e. in 2012/13, are one-off. BT provided us with its estimates of costs in 2012/13 at the launch of BT Sport. The Updated Forecasts do not include 2012/13. However, BT confirmed that in the Updated Forecasts "the business case for 2012/13 has not changed." Therefore, we have assessed the cost estimates for 2012/13, as presented in BT's Launch Forecasts.

ii) In relation to BT Sport programming and SG&A costs, any costs incurred in the initial year of BT Sport that are above the costs incurred in 2015/16 should be considered as one-off costs related to launch. In our analysis, we therefore calculate these one-off costs as the difference between the average monthly costs in 2013/14 and the average monthly costs in 2015/16.

iii) In relation to BT Sport transmission and distribution costs, BT provided a number of agreements with third parties as the basis for BT's cost estimates. These agreements allowed us to distinguish between specific one-off and ongoing transmission and distribution costs.

A3.114 We account for the one-off costs by calculating a monthly cost over three years with a NPV equal to our estimate of the one-off cost incurred. This calculation assumes the discount rate equal to the assumed (monthly) weighted average cost of capital (WACC).[803]

A3.115 We note that the precise timing when these costs are incurred is not indicated in BT's Updated Forecasts. Therefore, we make a simplifying assumption that all one-off costs are incurred at the beginning of 2013/14 (we then spread them over 36 months to the end of 2015/16).[804]

Content distribution rights costs

A3.116 As we explained in paragraph 6.56, we consider that the costs of content distribution rights should be spread linearly over the period of their duration.[805]

[802] Except for [✂] which, [✂], are spread over [✂].
[803] See also paragraph A1.230.
[804] This implies that the NPV of the one-off costs as at the beginning of 2013/14 is equal to the actual amount that BT incurred.
[805] We include a few odd months that would separate one bidding round from the next one in order to ensure consistency in how we treat the months that are off-season, e.g. June and July months when there are no live FAPL matches. Although BT's forecasts reveal that it expects subscriptions to slightly

These costs would depend on the total amount that BT agreed to pay when it was awarded the rights for content distribution. These costs would also depend on the timing of when BT pays for the rights, as it would incur the costs of financing the relevant payments to the rights owners, if these payments are made upfront.

A3.117 Based on the evidence on BT's rights payments,[806] BT pays the fees for the rights [✂]. As explained in paragraph A3.12, in order to take into account the costs of the rights and the timing of these payments when calculating the monthly net costs of BT Sport, we first discounted the payments for rights to the start date of each set of sports rights.[807] We then calculated the constant monthly cost that generates an NPV (as at the start date) over the duration of each set of rights equal to the NPV (as at the start date) of the cash payments. This method results in smoothing of the costs of rights as well as any costs of financing the payments over the duration of each set of sports rights.

A3.118 Below, we set out in detail how we treated BT Sport costs in relation to content distribution rights, programming, transmission and distribution, and SG&A.

Costs of rights

A3.119 On 1 August 2013, BT launched its three premium sports channels. Below, we provide a list of the main sporting events for which BT has acquired the rights during the period under investigation, the cost and duration of each set of rights:[808]

i) **Premier League**. BT acquired the rights to 38 live matches for a three year period ending in 2016, at a total cost of £[✂].[809]

ii) **FA Cup**. BT has acquired the rights to up to 24 live matches plus the Final for a five year period ending in 2018, at a total cost of £[✂].

iii) **UEFA Europa League**. BT has acquired the rights to the non-exclusive live coverage of 176 matches for the period up to 2015 for £[✂]. Note that BT has also acquired the exclusive distribution rights from 2015 to 2018, together with the exclusive distribution rights to the UEFA Champions League, at a total cost of £897 million. As discussed at paragraph 6.56, given that these rights do not come into effect before the summer of 2015, which is beyond the period of the offers we are considering, we do not include them in our assessment.

iv) **Scottish Premier League**. BT has acquired the rights to 30 exclusive SPL matches and 10 Glasgow Rangers matches from the Scottish Football League for the five year period ending in 2018, at a total cost of £[✂].

v) **Several national European football leagues and other football events**. BT has also acquired the rights to live coverage of several national football leagues in Germany (Bundesliga, for a two year period ending in 2015), France (Ligue 1, for a five year period ending in 2018),[810] Italy (Serie A, for a two year period

---

drop in the summer months, it does not forecast a full suspension of the channel over the summer period.

[806] BT's response to the 9th s26 Notice, Q26, 25 February 2014.

[807] See also paragraph A1.230.

[808] BT's response to 9th s26 Notice, Q25, 21 February 2014 and http://sport.bt.com/pages/sport/.

[809] It includes £[✂] costs of distribution rights in the Republic of Ireland.

[810] Based on the committed amount of fees (see BT's response to 9th s26 Notice, Q25, 21 February 2014) and the schedule of individual payments to be made by BT for these rights (BT's response to

ending in 2015),[811] amongst others. It has paid £[✂] in total for the broadcasting rights of these and other live football events.

vi) **Aviva Premiership Rugby**. BT has the rights for the 69 live matches for the five year period to 2018. It paid £[✂] in total for these rights.

vii) **J.P. Morgan Asset Management Premiership Rugby 7s**. BT has acquired the rights for the five year period ending in 2018 for a total cost of £[✂].

viii) **MotoGP**. BT acquired these broadcasting rights for a five year period ending in 2018, for a total cost of £[✂].

ix) **WTA**. BT has acquired the broadcasting rights to live coverage of 21 global WTA women's tennis tournaments as well as the season-ending WTA Tour Championships, for a four year period ending in 2017, for a total cost of £[✂].

x) **Ultimate Fighting Championship**. BT has acquired rights to over 30 exclusive live UFC mixed martial arts events, for a three year period ending in 2016, for a total cost of £[✂].

xi) **NBA**. BT acquired exclusive rights to live coverage of NBA games and other programming in the UK and Ireland for a four year period ending in 2017,[812] for a total cost of £[✂].

xii) **Other**. BT has also acquired the rights to other minor[813] sporting events such as rugby (Top 14, International Club Rugby (Twickenham)), racing (NASCAR, Indycar and World Rally Cars), basketball, triathlon and RedBull Sports and Lifestyle programming, for a total cost of £[✂].

Launch Forecasts

A3.120 BT distinguished between the committed spend (i.e. the rights that BT had already acquired) and uncommitted or speculative spend (i.e. the rights that BT would seek to win or retain in the future). To be consistent with our approach to future price increases in the assessment of BT's offers, in our analysis we only include the costs of content if BT had already incurred these at the time it announced the launch of BT Sport and the relevant rights were available on BT Sport during the period of the May 2013 offer. As explained in paragraph 6.56, the committed rights spend excluded the Champions League and the UEFA Europa League rights that BT acquired subsequently.

9th s26 Notice, Q26, 21 February 2014), for the purposes of our assessment, we have adjusted the expiry date of the Ligue 1 rights from 30 June 2015 to 30 June 2018.

[811] Based on the committed amount of fees (see BT's response to the 9th s26 Notice, Q25, 21 February 2014) and the schedule of individual payments to be made by BT for these rights (BT's response to 9th s26 Notice, Q26, 21 February 2014), for the purposes of our assessment, we have adjusted the expiry date of the Serie A rights from 30 June 2017 to 30 June 2015.

[812] Based on the committed amount of fees (see BT's response to the 9th s26 Notice, Q25, 21 February 2014) and the schedule of individual payments to be made by BT for these rights (BT's response 9th s26 Notice, Q26, 21 February 2014), for the purposes of our assessment, we have adjusted the expiry date of the NBA rights from 31 July 2016 to 31 July 2017.

[813] Based on BT's response to 9th s26 Notice, Q25, 21 February 2014, we calculated that the fees for each of these events are [✂].

A3.121 We note that BT's rights spend as of August 2013[814] may include certain content items, for which the rights were not acquired by BT before the announcement of the launch of the channels in May 2013. We considered that this applies to the rights for the FA Cup in particular which BT acquired at the end of June 2013. Therefore, we have excluded these content cost items from BT's rights budget to ensure that its content costs reflect the content that was part of the BT Sport offer at the time when BT announced the launch of BT Sport in May 2013. However, as explained in paragraph 7.25, we have also considered an assessment that includes all the content items that BT acquired as at the end of January 2014.

A3.122 The summary of the content distribution rights that BT acquired before the launch is provided in the Table A3.13.

Table A3.13: BT Sport committed rights budget, annual, as at launch

Sports rights costs, committed, annual	2012/13	2013/14	2014/15	2015/16	2016/17	2017/18	2018/19	Total
FAPL	£[✂]	£[✂]	£[✂]	£[✂]	£[✂]	£[✂]	£[✂]	£[✂]
Other football	£[✂]	£[✂]	£[✂]	£[✂]	£[✂]	£[✂]	£[✂]	£[✂]
Rugby	£[✂]	£[✂]	£[✂]	£[✂]	£[✂]	£[✂]	£[✂]	£[✂]
Other sports	£[✂]	£[✂]	£[✂]	£[✂]	£[✂]	£[✂]	£[✂]	£[✂]
TOTAL*	**£[✂]**	**£[✂]**	**£[✂]**	**£[✂]**	**£[✂]**	**£[✂]**	**£[✂]**	**£[✂]**

**Excludes c£900 million that BT announced in November 2013 that it had agreed to pay for the Champions League and the UEFA Europa League rights, which as noted in paragraph 6.56 are excluded from our assessment.*

A3.123 As explained in paragraph 6.56, we have considered that the costs of content rights need to be recovered over the period of their duration. As also explained in paragraph 6.56, this implies that for those rights that BT acquired for more than three years, only a proportion of the costs would be considered in calculating the costs for the period from 2013/14 to 2015/16.

A3.124 We additionally considered the timing when BT pays for the rights and any resulting costs of financing the payments for the rights. BT provided us with the details of its payments for the rights over the period to 2020/21.[815] As BT also explained, [✂].[816] As such, the costs are paid in fixed instalments in each year of the contract. In some instances, [✂], e.g. £[✂] for the [✂] rights ([✂] per cent of [✂]).

A3.125 Based on this information and the methodology explained in paragraph A3.117, we have estimated the average monthly costs of rights at the launch, on the assumption that the costs of payments are spread evenly over the duration of the rights, taking into account the timing of when BT is expected to make these

[814] BT's response to 5th s26 Notice, Q27 and Q28, 23 August 2013.
[815] BT's response to 9th s26 Notice, Q25, 21 February 2014.
[816] BT's response to 9th s26 Notice, Q25, 21 February 2014.

payments and any cost of financing the upfront payments for the rights, for the period to 2015/16.[817]

Table A3.14: BT Sport committed rights budget, monthly Ofcom estimates, as at launch

Sports rights, committed spend, monthly average	2013/14	2014/15	2015/16
FAPL	£[✂]	£[✂]	£[✂]
Other football	£[✂]	£[✂]	£[✂]
Rugby	£[✂]	£[✂]	£[✂]
Other sports	£[✂]	£[✂]	£[✂]
TOTAL*	**£[✂]**	**£[✂]**	**£[✂]**
TOTAL incl. costs of financing	**£[✂]**	**£[✂]**	**£[✂]**

**Excludes c£900 million that BT announced in November 2013 that it had agreed to pay for the Champions League and the UEFA Europa League rights, which as noted in paragraph 6.56 are excluded from our assessment.*

A3.126 In the submission to Ofcom of 22 November 2013, BT argued that a part of the rights costs, and in particular, [✂] per cent of the [✂] content costs should be [✂].[818] BT estimated that if [✂] per cent of the [✂] rights costs are excluded from the profitability analysis, it would reduce the average annual costs by £[✂].[819]

A3.127 As explained in paragraph 6.46, we consider that the full costs of the [✂] rights need to be included in the cost stack. However, we note that deducting [✂] per cent of the [✂] rights costs would reduce the average total monthly rights costs by just [✂] per cent or £[✂].

Updated Forecasts

A3.128 BT provided us with its revised rights budget in February 2014.[820] Based on the revised rights budget, to reflect BT's content costs as of January 2014, we added the fees for the rights for the FA Cup,[821] the World Rally Cars[822] and the NBA.[823]

[817] See also paragraph A1.230.
[818] BT's response to 4th s26 Notice, Q4 and Q5, 22 July 2013 - Annex 1A.01, Slide 10, 23 May 2012.
[819] BT's November submission (confidential), 22 November, page 45, paragraphs 7.24 and 7.25.
[820] BT's response to 9th s26 Notice, Q25, 21 February 2014.
[821] BT's acquisition of the FA Cup rights was announced on 17 July 2013, see e.g. http://home.bt.com/news/sportnews/bt-sport-wins-joint-fa-cup-rights-11363816257650
[822] BT's acquisition of the World rally cars was announced on 11 January 2014, see e.g. http://sport-onthebox.com/2014/01/11/bt-sport-secures-world-rally-championship-rights/
[823] BT's acquisition of the NBA rights was announced on 28 November 2013, see e.g. http://www.nba.com/2013/news/11/28/bristish-nba-tv.ap/

This increased BT's committed spend for the period to 2018/19 (reported in Table A3.13) by over £[✂] in total. The table below summarises our calculation of the average monthly costs of rights including these additional content costs, again based on the assumption that the rights costs are spread linearly over their duration and that BT incurs costs of financing cash payments for these rights.

Table A3.15: BT Sport committed rights budget, monthly Ofcom estimates, updated

Sports rights, committed spend, monthly average	2013/14	2014/15	2015/16
FAPL	£[✂]	£[✂]	£[✂]
Other football	£[✂]	£[✂]	£[✂]
Rugby	£[✂]	£[✂]	£[✂]
Other sports	£[✂]	£[✂]	£[✂]
TOTAL*	**£[✂]**	**£[✂]**	**£[✂]**
TOTAL incl. costs of financing	**£[✂]**	**£[✂]**	**£[✂]**

**Excludes c£900 million that BT announced in November 2013 that it had agreed to pay for the Champions League and the UEFA Europa League rights, which as noted in paragraph 6.56 are excluded from our assessment.*

Programming costs

A3.129 Programming costs are related to the actual production of the content either carried out by BT or by a third party. These costs cover the ongoing production costs, including people, equipment and equipment hire costs. Programming can also be commissioned by BT from internal and external production teams. Programming costs also include the costs of running studio facilities, including any directly attributable overheads and circuit costs.[824]

Launch Forecasts

A3.130 BT's Launch Forecasts distinguished between committed, uncommitted and speculative programming costs. BT's forecast of the average monthly programming costs was £[✂] in 2013/14, £[✂] in 2014/15, and £[✂] in 2015/16.

A3.131 As before, in the assessment of BT's current offers we consider that only the costs that BT was committed to incur at the time it announced its offers should be included. In particular, we note that any uncommitted and speculative programming costs are the costs that BT anticipates in relation to the rights which BT would seek to purchase or retain in the future. These rights as well as related programming costs are not included in the current BT Sport offers. Therefore, we adjusted BT's forecasts of the average monthly programming costs by excluding any uncommitted or speculative spend as reported by BT. As such, our adjusted monthly programming costs are lower than BT's forecasts, at £[✂] on average in 2013/14, £[✂] in 2014/15 and £[✂] in 2015/16.

[824] BT's response to 6th s26 Notice, Q25a, 4 October 2013.

A3.132 In addition to that, we distinguished between ongoing programming costs and one-off programming costs that are incurred in relation to the launch of the business. As explained in paragraph A3.113, one-off costs are estimated by calculating the difference of the costs in 2013/14 and in 2015/16, and adding all costs that were incurred in 2012/13 (prior to the launch of the channels). In combination this amounts to £[✂] one-off costs, which equates in NPV terms to a constant monthly cost of £[✂] over 36 months.

Table A3.16: BT Sport forecast monthly committed programming costs, based on Launch Forecasts

Committed programming costs, monthly average	2013/14	2014/15	2015/16	Total
BT Launch Forecast	**£[✂]**	**£[✂]**	**£[✂]**	
Ofcom assessment, total	**£[✂]**	**£[✂]**	**£[✂]**	
Ongoing	£[✂]	£[✂]	£[✂]	
One off (converted to constant monthly)	£[✂]	£[✂]	£[✂]	**£[✂]**

Updated Forecasts

A3.133 In the Updated Forecasts, BT raised its estimates of the average monthly programming costs to £[✂] in 2013/14, £[✂] in 2014/15, and £[✂] in 2015/16.

A3.134 We have adjusted the Updated Forecasts by excluding, as before, any uncommitted or speculative spend. Based on such adjustment, we estimated the committed BT Sport monthly programming costs to be £[✂] in 2013/14, £[✂] in 2014/15 and £[✂] in 2015/16. Our estimate of one-off programming costs incurred in 2013/14 is £[✂] per month on average, or £[✂] in total, plus the £[✂] incurred in 2012/13. This is equivalent in NPV terms to a £[✂] monthly ongoing cost for the 3 year period.

Table A3.17: BT Sport forecast monthly committed programming costs, based on Updated Forecasts

Committed programming costs, monthly average	2013/14	2014/15	2015/16	Total
BT Updated Forecast	**£[✂]**	**£[✂]**	**£[✂]**	
Ofcom assessment, total	**£[✂]**	**£[✂]**	**£[✂]**	
Ongoing	£[✂]	£[✂]	£[✂]	
One-off (converted to constant monthly)	£[✂]	£[✂]	£[✂]	**£[✂]**

Transmission and distribution costs

A3.135 BT Sport is distributed over four different platforms – satellite, BT IPTV Multicast, DTT, and OTT via BT Sport app and online website. We consider the costs of transmission and distribution of BT Sport below.

Transmission over satellite – transponder capacity and playout

A3.136 In distributing BT Sport over the Sky satellite platform, BT incurs the costs of purchasing transponder satellite capacity. It also pays for other related services such as playout services that ensure the transmission of channel content from BT to the satellite delivery network.

Launch Forecasts

Transponder satellite capacity

A3.137 Based on the Launch Forecasts, the transponder satellite capacity would cost BT a total of £[✂] in 2013/14, and £[✂] in 2014/15 and 2015/16. This does not include the costs of distributing ESPN channels, which were reported separately from the above costs of distributing BT Sport 1 and BT Sport 2, and are discussed at paragraphs A3.167 to A3.177.

A3.138 We have verified BT's transponder capacity cost estimates against the terms set out in the agreement between BT and [✂] for the provision of transponder satellite capacity and related services.[825] According to the agreement and the detailed calculations of distribution costs provided by BT,[826] BT would pay [✂] a total of £[✂] in 2013/14 and £[✂] in 2014/15 and 2015/16. These payments will be made in equal monthly instalments of £[✂] from May 2013 onwards in relation to BT Sport 1 and BT Sport 2, and monthly instalments of £[✂] from August 2013 onwards in relation to the ESPN channels. Therefore, the annual costs in relation to BT Sport 1 and BT Sport 2 (but excluding the ESPN related costs) would be £[✂] in the first year (covering 11 months only) and £[✂] in the two following years. Therefore, BT's Launch Forecasts for transponder satellite capacity costs of BT Sport 1 and BT Sport 2, estimated at £[✂] on average per month throughout the period 2013/14 – 2015/16, are aligned with the information set out in the agreement.

Playout services

A3.139 In addition to that, according to the Launch Forecasts, BT expected to incur the playout costs of a total of £[✂] in 2012/13, £[✂] in 2013/14, and £[✂] in 2014/15 and in 2015/16. These costs relate only to the playout costs for BT Sport 1 and BT Sport 2 because the ESPN costs are reported separately in BT's Launch Forecasts.

A3.140 BT purchases playout services for BT Sport 1 and BT Sport 2 from [✂]. We reviewed the agreement between BT and [✂][827] and the detailed calculations of distribution costs provided by BT.[828] According to BT's calculations, BT paid an upfront fee of £[✂] before 31 May 2013. In addition to that, according to the

[825] BT's response to 7th s26 Notice, Q21 (attachment 03), 17 December 2013.
[826] BT's response to 7th s26 Notice, Q21 (attachment 'Distribution'), 17 December 2013.
[827] BT's response to 7th s26 Notice, Q21 (attachment 04), 17 December 2013.
[828] BT's response to 7th s26 Notice, Q21 (attachment 'Distribution'), 17 December 2013.

agreement, BT would pay an annual fee (in recurring fixed monthly instalments in the region of £[✂]) of £[✂] - [✂], variable in each financial year, for the period until June 2016.

A3.141 We note that BT's Launch Forecasts are aligned with the terms set out in the agreement with [✂] and BT's detailed calculations of distribution costs, except for a slightly lower upfront fee of £[✂] that BT assumes in its forecasts, instead of £[✂] indicated in paragraph A3.140.[829] In our calculations we therefore adjust BT's Launch Forecasts to reflect the higher estimate of the upfront costs of £[✂].

A3.142 Once we adjust BT's Launch Forecasts of the total playout costs to exclude the £[✂] upfront fees, the ongoing monthly playout costs are estimated to be £[✂] in 2013/14 and £[✂] in 2014/15 and in 2015/16.

A3.143 The table below summarises the transponder satellite capacity and playout costs for BT Sport 1 and BT Sport 2 channels, based on BT's Launch Forecasts.

Table A3.18: BT Sport forecast monthly transponder satellite capacity and playout costs, based on Launch Forecasts

Transponder Satellite Capacity and Playout costs, monthly average	2013/14	2014/15	2015/16	Total
BT Launch Forecasts	**£[✂]**	**£[✂]**	**£[✂]**	
Ofcom assessment – ongoing, total	**£[✂]**	**£[✂]**	**£[✂]**	
Capacity	£[✂]	£[✂]	£[✂]	
Playout	£[✂]	£[✂]	£[✂]	
Ofcom assessment – one-off	(see Table A3.30)			**£[✂]**

Updated Forecasts

Transponder satellite capacity

A3.144 In BT's Updated Forecasts, BT reported transponder satellite capacity charges it pays to [✂] together with the DTT charges. Therefore, a separate estimate of the transponder satellite capacity costs is not available.

A3.145 However, as explained in paragraph A3.138, based on the terms in the agreement and the detailed calculations of distribution costs provided by BT,[830] BT agreed to pay [✂] a total of £[✂] in 2013/14, £[✂] in 2014/15 and £[✂] in 2015/16. This relates to the transponder satellite capacity costs of BT Sport 1 and BT Sport 2 as well as [✂], which BT reports under the same line item in its Updated Forecasts. Given that BT pays these fees in fixed monthly instalments it would incur an ongoing monthly cost of £[✂] in 2013/14 and £[✂] in 2014/15 and in 2015/16.

[829] Although as noted below, BT's Updated Forecasts reflect the £4.3 million upfront fee.
[830] BT's response to 7th s26 Notice, Q21 (attachment 'Distribution'), 17 December 2013.

Playout services

A3.146 In BT's Updated Forecasts, the playout costs include the costs both in relation to BT Sport 1 and BT Sport 2 as well as the ESPN channel. BT estimated playout costs to be a total of £[✂] in 2013/14, £[✂] in 2014/15 and £[✂] in 2015/16. Due to the inclusion of the playout costs of the ESPN channel, BT's updated estimates (which include ESPN) were higher than its launch estimates (which do not include ESPN), by £[✂] - [✂] each year.

A3.147 We note that BT has a separate three year agreement with [✂] in relation to the playout services of the ESPN channel. According to the agreement[831] and the detailed calculations of distribution costs provided by BT,[832] BT would pay to [✂] £[✂] in 2013/14, £[✂] in 2014/15 and £[✂] in 2015/16. In addition, the total amount of the upfront fee was increased in BT's Updated Forecasts by £[✂] , from £[✂] to £[✂] . This explains the difference between BT's Launch and Updated Forecasts.

A3.148 Once BT's Updated Forecasts are adjusted to exclude the £[✂] upfront fees (which are included as one-off costs), the average monthly ongoing playout costs would be £[✂] in 2013/14, £[✂] in 2014/15 and £[✂] in 2015/16.

Table A3.19: BT Sport forecast monthly transponder capacity and playout costs, based on Updated Forecasts

Transponder Capacity and Playout costs, monthly average	2013/14	2014/15	2015/16	Total
BT Updated Forecast	**£[✂]**	**£[✂]**	**£[✂]**	
Ofcom assessment, ongoing, total	**£[✂]**	**£[✂]**	**£[✂]**	
Capacity	£[✂]	£[✂]	£[✂]	
Playout	£[✂]	£[✂]	£[✂]	
Ofcom assessment, one-off	(see Table A3.31)			**£[✂]**

Transmission over satellite – variable DTH fees

A3.149 In addition, BT pays charges for transmission over satellite services which are variable with the number of BT Sport subscribers on the Sky platform. The fees for residential subscribers consist of the platform contribution charges, conditional access charges and access card charges (each payable per subscriber per month), pursuant to the Conditional Access (CA) services with [✂] in relation to the channels that are provided on a monthly subscription basis. Each charge depends on the monthly retail subscription charge (excluding VAT). BT's monthly payments to [✂] for commercial customers are revenue based.

[831] BT's response to 7th s26 Notice, Q21 (attachment 05), 16 December 2013.
[832] BT's response to 7th s26 Notice, Q21 (attachment 'Distribution'), 17 December 2013.

Launch Forecasts

A3.150 In its Launch Forecasts, BT provided us with the detailed [✂].[833] [✂][834] [✂].[835]

A3.151 We note that in its Launch Forecasts BT assumed that it (BT) will raise channel prices over time, which would also affect the CA fees that BT needs to pay to [✂] . As set out at paragraphs A3.38 and A3.68, we have not included these price increases in our analysis. Therefore, to be consistent, we have also adjusted the estimates of the CA fees downwards, assuming they are based on the current prices of the channels to the residential subscribers over the Sky platform.

A3.152 Our adjustment to the Launch Forecasts results in average monthly CA charges for residential BT Sport subscribers on Sky of £[✂] in 2013/14, and £[✂] in 2014/15 and 2015/16.

A3.153 BT provided us with its forecasts for commercial CA fees, based on BT's projections of BT Sport revenue from commercial premises. It also provided us with a copy of the amendment to the agreement with SSSL that specifies the applicable CA charges.[836] According to this amendment, commercial CA charges would be set at the higher of [✂] per cent of the commercial subscription revenue, [✂], or £[✂] per month per Access Card. [✂].[837] Consistently with information provided in the agreement between BT and [✂], we have assumed [✂] per cent CA fees throughout the period under investigation.[838]

[833] BT's response to 6th s26 Notice, Q21, Q24 and Q25, 28 October 2013.
[834] BT's response to 7th s26 Notice, Q22 (attachment 08), 16 December 2013.
[835] [✂]

[836] BT's response to 7th s26 Notice, Q22 (attachment 08), 16 December 2013. [✂].

[837] [✂]

[838] Based on BT's Launch Forecasts for 2013/14 – 2015/16, the monthly ARPU for pubs and clubs was at least £[✂] per month per premises. The Updated Forecasts suggested that ARPU could have fallen but was expected to be higher than £[✂] over the period from 2013/14 to 2015/16. If [✂] per cent rate is applied, the CA charges payable per premises would be at least £[✂] , or well above £[✂] . Therefore, although we do not have the data as to the number of Access Cards entitled to view BT Sport channels, we assumed, for simplicity that BT pays 8.75 per cent of the 'pubs and clubs' revenue.

A3.154 As explained in the previous subsection paragraph A3.67, BT's revenue projections for commercial premises assume an increase in ARPU over time but we consider that these forecast increases are irrelevant to BT's current offers under investigation. Therefore, we have adjusted BT's forecast of the commercial CA charges based on our projections of commercial revenues, which exclude ARPU increases, set out in paragraphs A3.67 to A3.68. The adjusted CA charges for commercial premises are £[✂] per month on average in 2013/14 and £[✂] per month on average for 2014 to 2016.

A3.155 BT also pays monthly fees to [✂] (formerly [✂]) for the subscription and management services which ensure "*authentication for the BT Sports channels, and to connect BT's internal subscriber management system (SMS) to Sky's conditional access (CA) system*."[839] BT's Launch Forecasts indicated that [✂],[840] [✂].

A3.156 Based on these charges, the forecast monthly average [✂] fees are £[✂] in 2013/14, £[✂] in 2014/15 and £[✂] in 2015/16.

A3.157 BT's Launch Forecasts specify that BT would incur £[✂] of upfront [✂] fees in 2012/13. [✂][841][✂]. As explained in paragraph A3.7, we take the figure presented in BT's launch forecasts for our assessment. We treat [✂] as a one-off cost.

[839] [✂]
[840] BT's response to 7th s26 Notice, Q23 (attachment 09), 16 December 2013.
[841] BT's response to 7th s26 Notice, Q23 (attachment 09), 16 December 2013.

Table A3.20: BT Sport forecast monthly CA and [✂] costs, based on Launch Forecasts

CA and [✂] costs, monthly average	2013/14	2014/15	2015/16	Total
BT forecast	**£[✂]**	**£[✂]**	**£[✂]**	
Ofcom assessment, ongoing, total	**£[✂]**	**£[✂]**	**£[✂]**	
CA fees – residential	£[✂]	£[✂]	£[✂]	
CA fees – commercial	£[✂]	£[✂]	£[✂]	
[✂]fees	£[✂]	£[✂]	£[✂]	
Ofcom assessment, one-off ([✂])	(see Table A3.30)			**£[✂]**

Updated Forecasts

A3.158 Given lower subscriber volumes in BT's Updated Forecasts, we have consistently adjusted downwards our estimates of the CA and [✂] fees, which are summarised in the table below.

Table A3.21: BT Sport forecast monthly CA and [✂] costs, based on Updated Forecasts

CA and [✂] costs, monthly average	2013/14	2014/15	2015/16	Total
BT forecast	**£[✂]**	**£[✂]**	**£[✂]**	
Ofcom assessment, ongoing, total	**£[✂]**	**£[✂]**	**£[✂]**	
CA fees – residential	£[✂]	£[✂]	£[✂]	
CA fees – commercial	£[✂]	£[✂]	£[✂]	
[✂]fees	£[✂]	£[✂]	£[✂]	
Ofcom assessment, one-off ([✂])	(see Table A3.31)			**£[✂]**

Transmission over satellite – EPG and other platform costs

A3.159 In addition, BT also pays to [✂] charges pursuant to the EPG service agreements, i.e. the EPG listing charge and the platform contribution charge. Both of these EPG service charges are payable per channel per annum. We note that these platform costs include other miscellaneous cost items (see paragraph A3.162). We also note that the amounts are not material to our assessment and therefore we have not sought to verify these with the underlying agreements.

Launch Forecasts

A3.160 BT's Launch Forecasts suggest that the platform costs are constant over the period 2013 to 2016 at an estimated £[✂] per annum. Aside from some small costs items, these costs mainly reflect the annual EPG fees (EPG listing charge and platform contribution charge) payable for BT Sport 1 and BT Sport 2 (both in SD and in HD). We note that the EPG fees for the ESPN channels in SD and in HD are reported separately in BT's Launch Forecasts.

A3.161 Based on the detailed calculations of the distribution costs provided by BT,[842] the EPG fees are [✂], including the EPG listing charge of £[✂] per channel per annum and the platform contribution charge of £[✂] per channel per annum.[843] The total EPG charges for four channels (BT Sport 1 and BT Sport 2, both in SD and in HD) are therefore £[✂] per annum, as per BT's forecasts, or £[✂] per month on average.

A3.162 We note that BT's Launch Forecasts report other miscellaneous costs under the items 'Platform costs' and 'Launch costs', although they are relatively immaterial. BT's Launch Forecasts indicate that BT also would incur £[✂] platform costs and £[✂] launch costs in 2012/13, i.e. before the channels went live. As explained in A3.113, we regard these costs as one-off.

Table A3.22: BT Sport forecast monthly platform costs, based on Launch Forecasts

Platform costs, monthly average	2013/14	2014/15	2015/16	Total
BT Launch Forecast	**£[✂]**	**£[✂]**	**£[✂]**	
Ofcom assessment, ongoing	**£[✂]**	**£[✂]**	**£[✂]**	
Ofcom assessment, one off	(see Table A3.30)			**£[✂]**

Updated Forecasts

A3.163 In its Updated Forecasts, BT has raised its estimate of annual platform costs from £[✂] to £[✂] in 2013/14 and to £[✂] in 2014/15 and 2015/16. This could be explained by the fact that in the updated model, these costs also include the ESPN related charges.

A3.164 In relation to ESPN, based on the detail calculations of the distribution costs provided by BT,[844] BT pays the EPG listing charge of £[✂] per annum per channel, the platform contribution charge of £[✂] per annum for the ESPN SD channel and the platform contribution charge of £[✂] per annum for the ESPN HD channel.

[842] BT's response to 7th s26 Notice, Q21 (attachment 'Distribution'), 17 December 2013.
[843] [✂]

[844] BT's response to 7th s26 Notice, Q21 (attachment 'Distribution'), 17 December 2013.

Therefore, the total EPG costs for ESPN are £[✂] per annum. The EPG costs for all the BT Sport channels are estimated at £[✂] per annum.

A3.165 We have not assessed in detail all the miscellaneous items included in the platform and launch costs as the amounts[845] are not material to our assessment.

A3.166 As before, we have adjusted the estimates to exclude one-off costs incurred prior to the launch of channels (a total of £[✂]), which are then spread over a three year period. In addition to these one-off costs, we estimated the average ongoing platform costs at £[✂] per month on average in 2013/14, £[✂] in 2014/15 and £[✂] in 2015/16.

Table A3.23: BT Sport forecast monthly platform costs, based on Updated Forecasts

Platform costs, monthly average	2013/14	2014/15	2015/16	Total
BT Updated Forecast	**£[✂]**	**£[✂]**	**£[✂]**	
Ofcom assessment, ongoing	**£[✂]**	**£[✂]**	**£[✂]**	
Ofcom assessment, one-off	(see Table A3.31)			**£[✂]**

ESPN costs

A3.167 In BT's Launch Forecasts for BT Sport, all ESPN related costs are reported separately. The detailed calculations provided by BT together with BT Sport Launch Forecasts suggest that in addition to the transponder capacity, playout and EPG fees, these costs also include the costs of acquiring ESPN brand licences, the promotional spend and advertising as well as the costs of digital services. As noted above, in BT's Updated Forecasts, some of these ESPN costs were reported under other transmission and distribution items (i.e. transponder capacity and playout costs, and EPG and other platform costs).

A3.168 Also, the ESPN costs reflect the one-off costs in relation to the termination of the previous ESPN agreement for the DTT capacity, as well as any staff redundancy costs. We considered that the costs of purchase of ESPN, although they are not reported in BT's forecasts for BT Sport should also be considered as one-off costs related to the channel launch, as they are the cost of purchasing assets that support BT Sport channel provision. Therefore, they should be recovered over the relevant period, i.e. three years.

A3.169 We have compared, where possible, these costs against the terms set out in the agreement between BT and ESPN, Inc. in relation to the acquisition of ESPN

[845] This includes £[✂] other platform and launch one-off costs in 2012/13 set out in paragraph A3.162, in addition to less than £[✂] other platform ongoing costs in 2014/15 and 2015/16.

Global Limited[846] as well as the detailed information available from BT's internal calculations supporting its forecasts.[847]

Launch Forecasts

A3.170 In BT's Launch Forecasts, the ESPN costs were estimated at £[✂] in 2013/14, £[✂] in 2014/15 and £[✂] in 2015/16.

A3.171 BT's detailed calculations[848] suggest that these costs in 2013/14 include £[✂] one-off costs in relation to staff redundancy, termination of the DTT agreement, promotional, advertising spend and consultation fees before the BT Sport channel launch. In addition, BT also paid £[✂] one-off costs for the purchase of ESPN Global Limited on completion,[849] which is not included in BT Sport profit and loss accounts in BT's Launch Forecasts.

A3.172 Adjusting BT's Launch Forecasts to exclude the £[✂] of one-off costs results in average ongoing monthly costs of £[✂] in 2013/14, £[✂] in 2014/15, and £[✂] in 2015/16.

A3.173 The total one-off costs that include the purchase price of the ESPN are £[✂], based on BT's Launch Forecasts.

Table A3.24: BT Sport forecast monthly ESPN costs, based on Launch Forecasts

ESPN costs, monthly average	2013/14	2014/15	2015/16	Total
BT Launch Forecasts	**£[✂]**	**£[✂]**	**£[✂]**	
Ofcom assessment, ongoing	**£[✂]**	**£[✂]**	**£[✂]**	
Ofcom assessment, one off	(see Table A3.30)			**£[✂]**

Updated Forecasts

A3.174 BT's Updated Forecasts include a reduction in the ESPN costs to a total of £[✂] in 2013/14, £[✂] in 2014/15 and £[✂] in 2015/16.

A3.175 As we explain above, in its Updated Forecasts, BT reports certain ESPN transmission costs (annual £[✂] - [✂]) under other line items, explaining in part the changes in the ESPN cost forecasts.

A3.176 In addition, the detailed information submitted by BT[850] suggests that BT has reduced its forecasts of the costs of staff redundancy and upfront promotional, advertising spend and consultation fees to £[✂] in total. Adjusting BT's Updated

[846] BT's response to 5th s26 Notice, Q29, 21 August 2013.
[847] BT's response to 6th s26 Notice, Q21, 24 and 25, 28 October 2013, and BT's response to 9th s26 Notice, Q29, 28 February 2014.
[848] BT's response to 6th s26 Notice, Q21, 24 and Q25.
[849] BT's response to 6th s26 Notice, Q21, 24 and Q25.
[850] BT's response to 9th s26 Notice, Q29, 28 February 2014.

Forecasts to exclude these one-off costs results in monthly average ongoing costs for ESPN of £[✂] in 2013/14, £[✂] in 2014/15 and £[✂] in 2015/16.

A3.177 We consider that the £[✂] ESPN purchase costs and £[✂] DTT agreement termination costs (which are excluded from BT's Updated Forecasts) should be included in BT Sport cost stack. As explained above, we consider these costs to be related to the channel launch. As such, the total one-off costs in relation to ESPN are £[✂]. [851]

Table A3.25: BT Sport forecast monthly ESPN costs, based on Updated Forecasts

ESPN costs, monthly average	2013/14	2014/15	2015/16	Total
BT Updated Forecasts	**£[✂]**	**£[✂]**	**£[✂]**	
Ofcom assessment, ongoing	**£[✂]**	**£[✂]**	**£[✂]**	
Ofcom assessment, one off	(see Table A3.31)			**£[✂]**

Transmission over DTT

A3.178 BT Sport 1 and BT Sport 2 in SD are available to customers that wish to watch the channels over the BT TV platform and have a subscription to BT SBB services (e.g. customers who live in non-Infinity areas). As explained in paragraph 2.29, the transmission of BT Sport 1 and BT Sport 2 to these customers is carried over digital terrestrial television (DTT). We note that these costs are directly attributable only to those BT Sport customers that take BT's SBB services and watch BT Sport via DTT because BT SFBB customers would not receive BT Sport via DTT. Therefore, we have excluded these costs in calculating the net costs that need to be absorbed in BT's SFBB margins.

A3.179 We nevertheless assess the DTT costs in order to be able to identify and exclude the relevant cost items from the net costs of BT Sport that could be allocated to BT's SFBB portfolio.

A3.180 BT pays DTT multiplex capacity charges to [✂] for the provision of multiplexing, distribution, transmission and marketing services on Multiplex C and D for which [✂] holds the licence.[852] In addition, BT has an agreement with [✂] in relation to the provision of the conditional access (CA) services that allow retailing of the BT

[851] Further information received from BT (BT's response to 11th s26 Notice, Q1, 6 October 2014) suggests that the figures for the ESPN acquisition price and DTT termination costs may in fact be slightly higher, at £[✂] and £[✂] respectively. However, as this would only have a trivial impact on the net costs of BT Sport, we have not amended the figures presented above. Similarly, the further information from BT suggests that the distribution of ongoing costs may in fact be slightly different, with slightly higher costs in 2013/14 and slightly lower costs in 2014/15 and 2015/16. Again, this would only have a trivial impact on the net costs of BT Sport, and we have not amended the figures presented above.

[852] BT's response to 7th s26 Notice (attachment 07), Q22, 16 December 2013, and BT's response to 9th s26 Notice, Q30a, 21 February 2014.

Sport channels to subscribers on the BT DTT platform.[853] According to the terms set out in the agreement between BT and [✂], [✂]. BT also pays [✂] £[✂] plus £[✂] handling fees for each new access card. BT's calculations of the distribution costs suggest that these costs are relatively immaterial, £[✂] in total, and mostly incurred in the first year.[854]

Launch Forecasts

A3.181 BT provided us with its Launch Forecasts of DTT transmission costs over the period from 2013/14 to 2015/16. These estimate that each year BT Sport 1 and BT Sport 2 transmission and distribution over DTT would cost £[✂] , or £[✂] monthly on average. We note that the ESPN channel is not available via the DTT platform.

A3.182 Based on the detailed calculations of the distribution costs provided by BT,[855] these costs include £[✂] - [✂] per year that BT pays to [✂] for the transmission and multiplex services,[856] and approximately £[✂] per year that BT pays for the CA services to [✂].[857] As explained above, BT would also pay fees to [✂] for each new access card, £[✂] in total, which we treat as a one-off cost.[858] Finally, BT's detailed calculations for its DTT cost estimates appear to include a substantial contingency budget on the basis that the estimates exceed the costs set out under the terms of its agreement with [✂].

A3.183 In the table below we set out the ongoing DTT costs based on BT's Launch Forecasts and our adjustments to those forecasts to exclude one-off costs from the calculation of the net costs of BT Sport for the purposes of assessing BT's SFBB margins.

[853] BT's response to 7th s26 Notice (attachment 06), Q22, 16 December 2013.
[854] BT's response to 7th s 26 Notice, Q21 (attachment 'Distribution'), 17 December 2013.
[855] BT's response to 7th s26 Notice, Q21 (attachment 'Distribution'), 17 December 2013.
[856] BT's response to 7th s26 Notice, Q21 (attachment 'Distribution'), 17 December 2013, BT's response to 9th s26 Notice, Q30a, 21 February 2014.
[857] [✂].
Therefore, we consider that no adjustments to BT's estimates are necessary.
[858] BT's response to 7th s26 Notice, Q21 (attachment 'Distribution'), 17 December 2013.

Table A3.26: BT Sport forecast monthly DTT costs, based on Launch Forecasts

DTT costs, monthly average	2013/14	2014/15	2015/16	Total
BT Launch Forecast	**£[✂]**	**£[✂]**	**£[✂]**	
Ofcom assessment, ongoing	**£[✂]**	**£[✂]**	**£[✂]**	
Ofcom assessment, one-off	(see Table A3.30)			**£[✂]**

Updated Forecasts

A3.184 As explained in paragraph A3.144, in the Updated Forecasts, BT reports the DTT costs together with the costs it incurs by purchasing transponder capacity from [✂], (a total of £[✂]in 2013/14 as well as £[✂]in 2014/15 and 2015/16). We estimate that, once the transponder capacity costs are excluded, the DTT costs are a total of £[✂]in 2013/14 and £[✂]in 2014/15 and in 2015/16, based on BT's Updated Forecasts.

A3.185 Although BT maintained its estimate of the DTT costs for 2014/15 and 2015/16, it reduced its forecasts for DTT costs in 2013/14. The difference in the annual cost estimate is mainly explained by the difference in the contingency costs that we assume BT makes in its calculations. Specifically, BT assumes £[✂] in the first year, whereas in the subsequent years it projects £[✂] - [✂]*"for unforeseen events such that if BT were not to meet its volumes forecasts, it would have spare capacity."*[859] BT explained that the revised figure for 2013/14 reflects more accurately the true costs based on the re-negotiated agreement with [✂].[860]

A3.186 As with BT's Launch Forecasts, we note that the DTT costs are directly attributable to BT's SBB customers only, and therefore they do not affect the costs of BT Sport allocated to BT's SFBB customers (see paragraph A3.289). As such, they have no impact on our assessment of BT's margins in SFBB. In the table below we set out the ongoing DTT costs based on BT's Updated Forecasts and our adjustments to those forecasts to exclude one-off costs from the calculation of the net costs of BT Sport for the purposes of assessing BT's SFBB margins.

[859] BT's response to 9th s26 Notice, Q30c, 28 February 2014.
[860] BT's response to 9th s26 Notice, Q30b, 28 February 2014.

Table A3.27: BT Sport forecast monthly DTT costs, based on Updated Forecasts

DTT costs, monthly average	2013/14	2014/15	2015/16	Total
BT Updated Forecast	**£[✂]**	**£[✂]**	**£[✂]**	
Ofcom assessment, ongoing	**£[✂]**	**£[✂]**	**£[✂]**	
Ofcom assessment, one off	(see Table A3.31)			**£[✂]**

Transmission over IPTV

A3.187 BT Sport is also distributed using IP technologies over broadband connections, via managed IPTV network or 'over-the-top' (OTT) streaming. BT uses its managed IPTV network to transmit BT Sport in SD and in HD via multicast[861] to a YouView set top box, if the subscriber has a SFBB connection. BT distributes BT Sport in SD via an app or online, to both its SBB and SFBB customers, using OTT technologies.[862]

Launch Forecasts

A3.188 In its Launch Forecasts, BT estimated that BT Sport transmission over multicast would cost £[✂] each month (see item 'Studio / connectivity' in the Table below). However, as the multicast costs incurred can support transmission over multiple channels, BT explained that "costs associated with providing multicast capabilities are included within the P&L for TV where they are captured within "Network Costs" along with costs associated with provision of all the other channels BT TV make available to BT TV customers."[863] Therefore, in its forecasts, BT assumed that the multicast costs should be excluded (see item 'Multicast – Group neutral' which fully offsets 'Studio / connectivity' costs in the Table A3.28), as otherwise it would result in double-counting.

A3.189 As explained in paragraphs A1.164 to A1.166, in relation to BT TV accounts, we have used the data in BT's most recent BRF for 2013/14, which includes fixed network costs. These network costs are used to calculate the ongoing costs per SFBB user, and hence, the margin available to absorb the costs of BT Sport. Therefore, in line with BT's accounting approach, we considered that the network costs costs should be excluded from BT Sport costs, as it would result in double-counting.

A3.190 BT also explained that it provides BT Sport over the top (OTT) streaming to iOS devices by using its own network. Therefore, the costs of BT Sport transmission

[861] With multicast technology, linear channels are streamed once to each telephone exchange or fibre cabinet and then over individual broadband lines on request. Therefore, due to the 'one-to-many' nature of multicast technology, backhaul traffic and associated costs do not depend on audience size.
[862] This distribution method requires use of Content Delivery Networks (CDNs) as well as backhaul networks. In OTT IPTV, content is 'unicast' to viewers i.e. a dedicated stream of data travels from the server to each and every viewer. Due to the 'one-to-one' nature of this distribution, the costs of transmission OTT would depend on the audience size.
[863] BT's response to 7th s26 Notice, Q19, 13 December 2013.

OTT to iOS devices would also be captured under the BT's network costs in the TV management accounts.[864]

A3.191 As with the YouView costs, in our analysis, network costs are taken from BT's BRFs for TV products for 2013/14 and included in the ongoing costs per SFBB user (see paragraph A1.161). Therefore, the costs of distributing BT Sport OTT would already be reflected in the margin. As such, we considered that these costs should be excluded from the calculation of the costs of BT Sport as it would otherwise result in double-counting.

A3.192 BT Sport distribution OTT to non-iOS devices is implemented by using the BT Wholesale Content Connect product as well as outsourcing distribution to [✂]. These costs would be captured under the 'Digital – Technical operations' line item in BT's forecasts, together with the relevant BT TSO charges (for managed services IT operations, development and maintenance, software licensing, live encoding and VoD encoding).[865] Based on BT's Launch Forecasts, 'Digital – Technical Operations' average monthly costs would be £[✂] in 2013/14, and £[✂] in 2014/15 and in 2015/16.

A3.193 In its Launch Forecasts, BT identified some other cost items related to the provision of BT Sport over IPTV, such as costs of the Red Button channel on the Sky platform, as well as costs related to the onscreen content of the BT Sport website, including licence fees paid to the picture agencies.[866] We note that these costs are relatively immaterial (less than £[✂] in total per year).

A3.194 The average ongoing monthly costs of BT Sport transmission over IPTV, based on BT's Launch Forecasts, are summarised in the table below.

Table A3.28: BT Sport forecast monthly IPTV costs, based on Launch Forecasts

IPTV costs, monthly average	2013/14	2014/15	2015/16
BT Launch Forecast	£[✂]	£[✂]	£[✂]
Ofcom assessment, total	£[✂]	£[✂]	£[✂]
Multicast – Group neutral	£[✂]	£[✂]	£[✂]
Studio / Connectivity	£[✂]	£[✂]	£[✂]
Digital – technical operations	£[✂]	£[✂]	£[✂]
Other digital costs	£[✂]	£[✂]	£[✂]

Updated Forecasts

A3.195 BT's Updated Forecasts do not include any multicast costs. As noted above, BT explained that these costs are reported in the BT TV management accounts. However, BT identified an additional cost item labelled 'Studio connectivity' in relation to connectivity services required to support the provision of the channels –

[864] BT's response to 6th s26 Notice, Q9a, 18 October 2013.
[865] BT's response to 7th s26 Notice, Q20 to 23, Annex A (Amended), 17 December 2013.
[866] BT's response to 6th s26 Notice, Q25, 4 October 2013.

e.g. to connect the BT Sport studio to the BT Tower and to [✂].[867] BT estimates these costs at a total of £[✂] per year, or £[✂] per month over the period 2013/14 – 2015/16.

A3.196 The average ongoing monthly costs of BT Sport transmission over IPTV, based on BT's Updated Forecasts, are summarised in the table below.

Table A3.29: BT Sport forecast monthly IPTV costs, based on Updated Forecasts

IPTV costs, monthly average	2013/14	2014/15	2015/16
BT Updated Forecasts	**£[✂]**	**£[✂]**	**£[✂]**
Ofcom assessment, total	**£[✂]**	**£[✂]**	**£[✂]**
Multicast – Group neutral	£[✂]	£[✂]	£[✂]
Studio / Connectivity	£[✂]	£[✂]	£[✂]
Digital – technical operations	£[✂]	£[✂]	£[✂]
Other digital costs	£[✂]	£[✂]	£[✂]

Transmission and distribution costs – summary

A3.197 The table below summarises average monthly BT Sport transmission and distribution costs. The table below presents BT's Launch Forecasts and Updated Forecasts as well as the adjustments we have made to these, in order to distinguish between ongoing and one-off costs. We have also spread the one-off costs over a three year period, and we present in the table the total one-off costs based on BT's forecasts, as well as the monthly cost estimate over a three year period of an equivalent NPV.

Table A3.30: BT Sport forecast monthly transmission and distribution costs, total, based on Launch Forecasts

Transmission & distribution costs, total, monthly average	2013/14	2014/15	2015/16	Total
BT Launch Forecast	**£[✂]**	**£[✂]**	**£[✂]**	
Ofcom assessment, total	**£[✂]**	**£[✂]**	**£[✂]**	
Ongoing	£[✂]	£[✂]	£[✂]	
One-off (converted to constant monthly)	£[✂]	£[✂]	£[✂]	£[✂]

[867] BT's response to 7th s26 Notice, Q19, 13 December 2013.

Table A3.31: BT Sport forecast monthly transmission and distribution costs, total, based on Updated Forecasts

Transmission & distribution costs, total, monthly average	2013/14	2014/15	2015/16	Total
BT Updated Forecast	**£[✂]**	**£[✂]**	**£[✂]**	
Ofcom assessment, total	**£[✂]**	**£[✂]**	**£[✂]**	
Ongoing	£[✂]	£[✂]	£[✂]	
One-off (converted to constant monthly)	£[✂]	£[✂]	£[✂]	£[✂]

SG&A costs

A3.198 BT incurs a number of SG&A costs in relation to BT Sport. These costs include product development, marketing and research, customer services, sales, billing or any required engineer visits. BT also incurs costs in relation to maintaining the channel team as well as renting the channel studio.

A3.199 We consider that some of the above costs are ongoing and some are one-off. As explained in paragraph A3.113, the one-off costs are any costs incurred in 2012/13 as well as costs in 2013/14 that are on average higher than these costs in 2015/16.

A3.200 As explained in paragraph A1.14, BT does not report SG&A costs in the separate product management accounts. However, BT provided its estimates of its planned expenditure on SG&A related to BT Sport in its forecasts for BT Sport. Given that BT Sport has been launched very recently, the information on BT Sport's SG&A cost during the course of this investigation was limited to BT's cost forecasts.

A3.201 We note that some of BT Sport SG&A costs in 2012/13 may also be reported in the SG&A management accounts for 2012/13. As explained in paragraph A1.15 and Annex 2, we use these management accounts to allocate a proportion of SG&A costs to BT's SFBB in calculating the headroom available in SFBB to absorb the net costs of BT Sport. Therefore, we note that we may be double counting some of the SG&A costs of BT Sport in 2012/13. Based on the information in the BRFs for BT Sport, we estimate that £[✂] SG&A costs reported in BT's forecasts for BT Sport for 2012/13 also appear in the SG&A management accounts for 2012/13.[868] Therefore, we have excluded these £[✂] SG&A costs for 2012/13 from BT's forecasts for BT Sport.

A3.202 BT has claimed that as we have excluded these costs from the BT Sport accounts, but left them in the overall broadband management accounts we may have overstated SG&A costs. In BT's August submission, BT noted that if these BT Sport SG&A are instead included in the BT SFBB headroom calculation as ongoing

[868] We understand that all BT Sport SG&A costs appear in the SG&A management accounts for 2012/13, except for £[✂] costs in 2012/13 in relation to field force and BT Operate costs to support the provision of BT Sport to commercial premises that are reported in the BT Sport BRFs. See BT's response to 3rd s26 Notice, Q19a and Q20, 24 June 2013.

costs, it would imply that they are incurred every year over the ACL and would result in overstated SG&A costs.[869]

A3.203 The exact impact of these costs depends on whether the £[✂] of SG&A costs relate to ongoing SG&A costs, customer acquisition costs (which are spread over the customer lifetime of [✂] years) or to launch costs for BT Sport (which are spread over a three year period).

A3.204 We had insufficient information to distinguish which of the £[✂] SG&A costs of BT Sport are treated as ongoing and which are regarded as customer acquisition costs in BT SFBB headroom calculation. However, we consider it unlikely that any resulting inaccuracy could result in systematically overstated SG&A costs. We also note that this cost item is relatively immaterial and treating it as an SFBB ongoing cost, customer acquisition cost or one-off BT Sport launch cost would not change our conclusions.[870]

A3.205 We noted that in BT's detailed calculation of BT Sport billing costs in its Launch Forecasts,[871] these costs are assumed to be volume sensitive, i.e. each new BT Sport subscriber would increase BT's monthly billing costs by £[✂]. In its calculations, BT also assumed that BT Sport will have a positive incremental impact on voice, broadband and TV subscriptions. In turn, each additional voice, broadband and TV customer will also lead to an increase in the billing costs that are incremental to BT Sport.

A3.206 As explained in paragraph A3.102, we are excluding any incremental impact of BT Sport on voice, broadband and TV customers. Therefore, for consistency, we have recalculated BT Sport billing costs by excluding any costs that are driven by the incremental non-BT Sport subscriptions. This resulted in a decrease in the monthly billing costs from £[✂] - [✂] to £[✂] - [✂], based on BT's Launch Forecasts. We therefore note that this cost item is relatively immaterial and would not have a material impact on our results.

A3.207 In its Updated Forecasts, BT reduced its estimates for the billing costs due to "assumed efficiencies."[872] BT explained that it lowered its billing cost estimates "due to the fact that subscribers will already receive a bill and therefore the incremental cost of including the Sport element *is small.*"[873] BT also stated that in the Launch Forecasts, "*the billing costs were included as an estimated placeholder at the time. These costs are not currently tracked on a per subscriber basis.*"[874] BT's Updated Forecasts do not specify how much of the reduction in the billing costs comes from

[869] BT's August submission (confidential), 6 August 2014, paragraph 2.44.
[870] If we treated these costs as any other BT Sport launch costs, they would be first, spread over a period of three years, and second, allocated to BT SFBB using either the 'first' or the 'second' allocation approach, as described in paragraphs 6.74 to 6.81. Depending on the specific method applied, these costs would result in a monthly cost per average SFBB customer ranging from £[✂] to £[✂]. If however we treated these SG&A costs as ongoing SFBB costs and allocated them to BT SFBB and SBB by applying the product based approach, as described in paragraph A2.21, this would result in the highest monthly cost estimate, out of all possible approaches. Under this approach, £[✂] annual SG&A costs would be equivalent to £[✂] monthly costs per average SFBB customer. This suggests that even if we overestimated the SG&A costs we would not have overestimated it by more than £[✂].
[871] BT's response to 6th s26 Notice, Q21, 24 and Q25
[872] BT's response to 7th s26 Notice, Q11 and 11A, 29 November 2013.
[873] BT's response to 9th s26 Notice, Q31, 14 February 2014.
[874] BT's response to 9th s26 Notice, Q31, 14 February 2014.

the lower billing costs per BT Sport subscriber, as opposed to BT's voice, broadband or TV subscribers.

A3.208 We have assumed that the reduction in BT Sport billing costs per BT Sport subscriber is proportionate to the overall reduction in these costs over the period 2013/14 to 2015/16. As such, based on the Updated Forecasts, the monthly billing costs are reduced from £[✂] (reported in BT's Launch Forecasts) to £[✂] per BT Sport subscriber.

Launch Forecasts

A3.209 In BT's Launch Forecasts [✂] which amounts to £[✂] in total over a three year period.[875] BT expected to spend £[✂] per month on average in 2013/14, and £[✂] in 2014/15 and in 2015/16 on consumer and commercial marketing as well as any related research. BT Sport marketing expenditure for 2013/14 appears to be consistent with BT's other internal estimates. For instance, in BT Consumer's marketing budget forecast for 2013/14,[876] approximately £[✂] is directly attributable to BT Sport, which is in line with the marketing cost estimate provided in the BT Sport Launch Forecasts for 2013/14 of £[✂].

A3.210 The [✂] in this cost group is the channel team expenses and the costs of renting out the studio. BT projected that it will spend £[✂] per month on average in 2013/14 and in 2014/15, and £[✂] per month on average in 2015/16 on its channel team.[877] This is in addition to the £[✂] upfront costs that BT incurred in building the studio and related facilities.[878]

A3.211 BT Sport monthly sales costs, based on BT's Launch Forecasts, are [✂] in the initial year 2013/14, at £[✂] per month on average, compared to £[✂] average monthly costs in 2014/15 and 2015/16.

A3.212 BT Sport customer services are also forecast to be [✂] in 2013/14, at £[✂], compared to £[✂] in 2014/15 and 2015/16.[879]

A3.213 Other SG&A costs, such as the costs driven by engineers visits, billing services, operational support and other activities, [✂] over 2013 to 2016, at £[✂] per month on average. BT's estimates show that some of these costs, i.e. costs in relation to operational support and in relation to selling BT Sport subscriptions to commercial premises (£[✂] in total), were incurred in 2012/13. We note that BT classifies these two cost items as BT Sport specific costs and reports them in the BT Sport BRFs.[880] Subsequently, these costs would not be reported in the general SG&A management accounts for 2012/13. Therefore, we have included these costs in the one-off launch cost stack, as it creates no double counting issue.

[875] Note that £[✂] of these costs incurred in 2012/13 are excluded from our calculations to avoid double counting, as explained in paragraph A3.204.
[876] BT's response to 6th s26 Notice, Q12, 18 October 2013.
[877] Note that £[✂] of these costs incurred in 2012/13 in relation to building up the channel team are excluded from our calculations to avoid double counting, as explained in paragraph A3.204.
[878] BT's response to 7th s26 Notice, Q25, 13 December 2013.
[879] Note that an additional spend of £[✂] on sales and customer services in 2012/13 is excluded from our calculations to avoid double counting, as explained in paragraph A3.204.
[880] BT's response to 3rd s26 Notice, Q19a and Q20, 24 June 2013.

A3.214 BT's Launch Forecasts suggest that the development costs in 2013/14 were £[✂] in total.[881]

A3.215 Using the above information and the assumptions set out in paragraph A3.113, we distinguished between those SG&A costs that are ongoing and those SG&A costs that should be treated as one-off. We present the summary of these costs in the tables below.

[881] Note that £[✂] of development costs incurred in 2012/13 are excluded from our calculations to avoid double counting, as explained in paragraph A3.204.

Table A3.32: BT Sport forecast SG&A costs, total one-off, based on Launch Forecasts

One-off SG&A costs, total	2012/13	2013/14	Total
Marketing & research	£[✂]	£[✂]	
CS & sales	£[✂]	£[✂]	
Channel team	£[✂]	£[✂]	
Studio	£[✂]	£[✂]	
Development	£[✂]	£[✂]	
Other	£[✂]	£[✂]	
Total	**£[✂]**	**£[✂]**	**£[✂]**

Table A3.33: BT Sport forecast monthly SG&A costs, ongoing, based on Launch Forecasts

Ongoing SG&A costs, monthly average	2013/14	2014/15	2015/16
Marketing & research	£[✂]	£[✂]	£[✂]
CS & sales	£[✂]	£[✂]	£[✂]
Channel team	£[✂]	£[✂]	£[✂]
Studio	£[✂]	£[✂]	£[✂]
Development	£[✂]	£[✂]	£[✂]
Other	£[✂]	£[✂]	£[✂]
Total ongoing	**£[✂]**	**£[✂]**	**£[✂]**

Table A3.34: BT Sport forecast monthly SG&A costs, total, based on Launch Forecasts

SG&A costs, total, monthly average	2013/14	2014/15	2015/16	Total
BT Launch Forecast	**£[✂]**	**£[✂]**	**£[✂]**	
Ofcom assessment, total	**£[✂]**	**£[✂]**	**£[✂]**	
Ongoing	£[✂]	£[✂]	£[✂]	
One off (converted to constant monthly)	£[✂]	£[✂]	£[✂]	£[✂]

Updated Forecasts

A3.216 In its Updated Forecasts for BT Sport, BT explained that it [✂] its marketing spend by £[✂] [882] in 2013/14 [✂].

A3.217 BT also explained that it [✂] on the channel staff to produce more content programming in house, by a total of £[✂] over a three year period.

A3.218 Although BT did not change its estimate for the costs for customer services, BT explained that [✂] by nearly £[✂] in total in 2013-16.

A3.219 Our comparison of BT's Launch and Updated Forecasts has shown that Updated Forecasts of other SG&A costs [✂] in total in 2013-16, [✂].

A3.220 BT has also [✂]. In its Updated Forecasts, BT [✂]. Due to our approach in calculating one off costs in relation to BT Sport launch, set out in paragraph A3.113, this [✂] that we consider as one-off by £[✂] in total, as well as [✂] by £[✂] per month on average.

A3.221 The tables below summarise one-off, ongoing and total SG&A costs for BT Sport based on BT's Updated Forecasts. Note that we have maintained the same estimate of one-off costs in 2012/13 as in the Launch Forecasts because BT's did not revise its forecasts for this period.

[882] Includes over £[✂] spend in 2013/14 on affiliates and vouchers [✂], as BT explained in its response to the 7th s26 Notice, Q11, 29 November 2013.

Table A3.35: BT Sport forecast SG&A costs, total one-off, based on Updated Forecasts

One-off SG&A costs, total	2012/13	2013/14	Total
Marketing & research	£[✂]	£[✂]	
CS & sales	£[✂]	£[✂]	
Channel team	£[✂]	£[✂]	
Studio	£[✂]	£[✂]	
Development	£[✂]	£[✂]	
Other	£[✂]	£[✂]	
Total	**£[✂]**	**£[✂]**	**£[✂]**

Table A3.36: BT Sport forecast monthly SG&A costs, ongoing, based on Updated Forecasts

Ongoing SG&A costs, monthly average	2013/14	2014/15	2015/16
Marketing & research	£[✂]	£[✂]	£[✂]
CS & sales	£[✂]	£[✂]	£[✂]
Channel team	£[✂]	£[✂]	£[✂]
Studio	£[✂]	£[✂]	£[✂]
Development	£[✂]	£[✂]	£[✂]
Other	£[✂]	£[✂]	£[✂]
Total ongoing	**£[✂]**	**£[✂]**	**£[✂]**

Table A3.37: BT Sport forecast monthly SG&A costs, total, based on Updated Forecasts

SG&A costs, monthly average	2013/14	2014/15	2015/16	Total
BT Updated Forecast	**£[✂]**	**£[✂]**	**£[✂]**	
Ofcom assessment, total	**£[✂]**	**£[✂]**	**£[✂]**	
Ongoing	£[✂]	£[✂]	£[✂]	
One-off (converted to constant monthly)	£[✂]	£[✂]	£[✂]	£[✂]

BT Sport costs applicable to an EEO - summary

A3.222 Below we summarise BT Sport content, transmission and distribution as well as SG&A costs, based on BT's Launch and Updated Forecasts for BT Sport, and the adjustments we make to these in order to distinguish between ongoing and one-off costs. We note that although the monthly cost estimates based on Updated Forecasts are £[✂] - [✂] higher than the estimates based on the Launch Forecasts, the relative structure of the BT Sport cost stack remains relatively stable. In relation to both forecasts, content costs, i.e. rights and programming spend, represents [✂] of the total costs. Transmission and distribution drives [✂], while SG&A makes up [✂].

Table A3.38: BT Sport forecast monthly costs, total, based on Launch Forecasts

BT Sport costs, monthly average	2013/14	2014/15	2015/16
BT Launch Forecast	**£[✂]**	**£[✂]**	**£[✂]**
Ofcom assessment, total	**£[✂]**	**£[✂]**	**£[✂]**
Rights	£[✂]	£[✂]	£[✂]
Programming	£[✂]	£[✂]	£[✂]
Transmission & distribution	£[✂]	£[✂]	£[✂]
SG&A	£[✂]	£[✂]	£[✂]

Table A3.39: BT Sport forecast monthly costs, total, based on Updated Forecasts

BT Sport costs, monthly average	2013/14	2014/15	2015/16
BT Updated Forecast	**£[✂]**	**£[✂]**	**£[✂]**
Ofcom assessment, total	**£[✂]**	**£[✂]**	**£[✂]**
Rights	£[✂]	£[✂]	£[✂]
Programming	£[✂]	£[✂]	£[✂]
Transmission & distribution	£[✂]	£[✂]	£[✂]
SG&A	£[✂]	£[✂]	£[✂]

BT Sport 'net costs'

A3.223 As explained in paragraphs 6.36 and 6.37, for the purposes of BT's SFBB profitability analysis, we calculate BT Sport monthly net costs, i.e. the costs that are not recovered from the direct BT Sport revenue and that need to be absorbed in the margins of BT's broadband customers that receive the channels for free.

BT's May 2013 offer – BT Sport net costs based on Launch Forecasts

A3.224 As we explain in paragraphs 6.68 and 6.69, we consider it appropriate to assess the May 2013 offer by reference to BT's Launch Forecasts. As set out at paragraphs A3.8 to A3.12, we made some adjustments to the Launch Forecasts. We now set out below how we have assessed the reasonableness of the Launch Forecasts against other data sources at the time of the launch of BT Sport in May 2013. We explain this in detail below.

Monthly subscription revenues from residential customers

A3.225 As set out at paragraphs A3.38 and A3.39, we calculated the BT Sport monthly revenue from residential subscriptions, based on current BT Sport subscription fees and the volumes in BT's Launch Forecasts for residential BT Sport subscribers, both with and without BT broadband. We explain below how we assess the reasonableness of these estimates, in particular BT's assumptions in relation to the number of 'paying' BT Sport subscribers on Sky (i.e. those Sky TV customers who do not have BT broadband and hence pay a monthly subscription fee for BT Sport in SD), and the level of take-up of BT Sport HD.

'Paying' subscribers on Sky

A3.226 We considered the volumes of paying BT Sport subscribers with Sky TV in BT's Launch Forecasts. We acknowledge that it may be difficult to forecast demand for a brand new product before it is launched. However, we have compared BT's forecasts with those of third party analysts at the time and with the closing subscription base of ESPN (as the previous non-Sky holder of the FAPL rights) and have found BT's Launch Forecasts to be broadly in line with these. This is illustrated in Table A3.40. We also note that BT's Launch Forecasts were produced for BT's internal decision making and we therefore consider that they are the best available evidence as to BT's forecasts in relation to BT Sport at the relevant time. On this basis, we consider that the volume forecasts in BT's Launch Forecasts provide a reasonable basis for our calculations at the time of the launch of BT Sport, and we adopt them for the purpose of the analysis of the May 2013 offer.

Table A3.40: BT's Launch and third party forecasts of 'paying subscribers' on Sky

Paying Subscribers on Sky ('000, closing base)	2010/11	2013/14	2014/15	2015/16
BT Launch Forecasts*		[✂]	[✂]	£[✂]
Citi**		900	1,050	1,100
Macquarie Research***		-	-	1,080
ESPN (2010/11)****	[✂]	-	-	-

* BT Response to Ofcom formal Notice under section 26 dated 20 August 2013, Q30, received on 23 August 2013
** Citi, A Sporting Chance for BT, 21 June 2013
*** TalkTalk's supplementary submission, Table (3.4), based on Macquarie Research estimates
**** Also includes [✂] subscribers on TUTV, Tiscali and Small World platforms, Ofcom, Pay TV investigation, 2010 ([✂])

HD take-up on Sky and BT TV

A3.227 We have considered whether BT's forecasts of the revenues from selling subscriptions to BT Sport in HD were reasonable at the time when BT produced its Launch Forecasts. BT receives HD revenues from both 'paying' subscribers on Sky (customers on the Sky platform that do not take BT broadband) and 'free' subscribers on either Sky or BT TV via multicast (BT Sport subscribers that receive the channels in SD for free, as they subscribe to BT broadband services).

A3.228 In order to assess the reasonableness of its forecasts, we have considered BT's assumption that [✂] per cent of BT Sport customers on Sky TV and BT TV via multicast would take the HD option.[883] Again, we note that BT Sport HD is a new product, and so it is inherently difficult to forecast demand for it in advance of launch.

A3.229 In relation to the assumption that [✂] per cent of BT Sport customers on Sky TV and BT TV would take the HD option, we note that BT explained that a [✂] per cent HD take-up assumption reflected its understanding that *"approximately* [✂]*% of Sky's TV base take up HD."*[884] Although Sky HD is a different product from BT Sport HD in terms of content and pricing, the majority of customers that take BT Sport in HD are on the Sky platform. Therefore the customers that choose to subscribe to Sky HD may be the same customers that choose to subscribe to BT Sport HD. We thus consider that Sky HD take-up could have been considered as a reasonable benchmark of likely take-up on BT Sport HD at the time BT announced the launch of BT Sport.

A3.230 BT also explained that it used the [✂] per cent take-up forecast for internal purposes as an [✂].[885] We also note that BT used the same assumption in its internal profitability assessment. In this regard we also note that the actual HD take-

[883] BT's response to 6th s26 Notice, Q21, Q24 and Q25, 28 October 2013 and BT's response to 9th s26 Notice, Q22a, 28 February 2014.
[884] BT's response to 9th s26 Notice, Q22a, 28 February 2014.
[885] BT's response to 9th s26 Notice, Q22a, 28 February 2014.

up in January 2014, at [✂] per cent[886], has been [✂] than BT's assumed [✂] per cent (see paragraph A3.263).[887]

A3.231 We note that BT's HD revenue forecasts would also depend on BT's assumption on the total volumes of BT Sport SD subscribers that are also eligible to take the HD offer. This includes 'paying' subscribers to BT Sport SD on Sky and 'free' subscribers to BT Sport SD on Sky and BT TV. As explained above, the number of 'paying' subscribers on Sky in BT's Launch Forecasts is aligned with independent forecasts. Therefore, to this extent we would consider BT's Launch Forecasts of the HD revenue from paying subscribers to be reasonable.

A3.232 In relation to BT Sport 'free' subscribers on Sky and BT TV, we note that there was little analysis available at the time when the BT Sport launch was announced on what the take-up of these customers would be apart from BT's Launch Forecasts. Although we were not able to assess how reasonable these forecasts could have been in May 2013, we nevertheless note that this revenue item is relatively immaterial.[888] We also note that the actual take-up among these customers has been higher than BT's projections in its Launch Forecasts (see Table A3.41).

A3.233 Consistent with the information that was available to BT when it set its May 2013 prices, we have adopted BT's Launch Forecasts for both the number of 'paying' subscribers on Sky and the number of 'free' subscribers on Sky and BT TV. As explained in paragraph A3.14, we take into account that BT's forecasts are not aligned with the actual take-up when we assess BT's January 2014 prices.

Table A3.41: BT's volume forecasts and the actual take up of 'free' subscribers to BT Sport on Sky and BT TV.

Free' Subscribers on Sky TV and BT TV ('000)	Aug-13	Sept-13	Oct-13	Nov-13	Dec-13	Jan-14
BT – Launch Forecasts	[✂]	[✂]	[✂]	[✂]	[✂]	[✂]
Actual volumes	[✂]	[✂]	[✂]	[✂]	[✂]	[✂]

A3.234 As we find that BT's assumption of [✂] per cent take-up of BT Sport HD and its forecasts for 'paying' subscribers on Sky were reasonable at the time of launch, we have adopted the forecasts of revenues from BT Sport HD in the Launch Forecasts for the purpose of our assessment of the May 2013 offer.

[886] BT's response to 9th s26 Notice, Q19, 18 February 2014.
[887] We also note that HD take-up [✂] would be reasonable to expect, if BT continues to charge for HD, that the HD take-up will [✂] to fall as the overall 'free' subscriber (to BT Sport in SD) base grows.
[888] Based on BT's Launch Forecasts, once they are adjusted to exclude any future price increases, the average monthly HD revenues from 'free' BT Sport subscribers would reflect [✂] per cent of the total monthly revenues over the period from 2013/14 to 2015/16.

Monthly sublicensing to Virgin Media and Setanta in Republic of Ireland

A3.235 BT's Launch Forecasts exclude the revenues from wholesale to Virgin Media and Setanta in the Republic of Ireland. We consider that this is reasonable, given that BT signed and announced these wholesale deals after it announced the launch of the BT Sport channels in May 2013.

Monthly subscription revenues from commercial premises

A3.236 As explained in paragraph A3.68, in estimating BT Sport monthly revenue from commercial subscriptions, we have adjusted BT's Launch Forecasts to exclude any ARPU increases that BT assumes in its forecasts. We estimated the average monthly commercial revenues at £[✂] in 2013/14, £[✂] in 2014/15 and £[✂] in 2015/16. As a cross-check, we have compared these estimates with a number of third party analysts' estimates at the launch of BT Sport (Citi, Macquarie Research, Banco Espirito Santo and Morgan Stanley).

A3.237 As noted in TalkTalk's submission, Macquarie Research estimated that BT would make sales worth £30 million per year to commercial premises.[889] Banco Espirito Santo forecast that BT will make revenues of £36m per year from commercial premises.[890] Morgan Stanley forecast that the revenues would be between £50 million and £60 million a year.[891]

A3.238 For comparison, our estimate of total annual revenue from commercial premises is £[✂] in 2013/14 (assuming 8 months in the financial year), £[✂] in 2014/15 and £[✂] in 2015/16. As these estimates [✂].

Advertising

A3.239 We have also considered the third party estimates of BT's advertising revenue as at the launch of BT Sport. Macquarie forecast that by 2015/16 BT Sport will generate annual advertising revenues of £21 million.[892] Banco Espirito Santo forecast advertising revenues of £16 million in 2013/14, £20m in 2014/15 and £23 million by 2015/16.[893]

A3.240 BT's Launch Forecasts estimated that the advertising revenue would be £[✂] in 2013/14, and approximately £[✂] in 2014/15 and in 2015/16. [✂], we considered it appropriate to use the Launch Forecast estimates in our analysis of BT's May 2013 offer for the purposes of the no grounds for action decision. Using the [✂] estimate, in line with third party estimates, would not change our decision.

BT Sport costs

A3.241 Given that BT Sport was only launched in August 2013, BT has no audited accounts for BT Sport. BT's next management accounts are not expected before autumn 2014. For the purpose of our assessment of the BT Sport costs for the May 2013 offer, we have used the Launch Forecasts as our starting point. We have sought to verify these using other sources where possible, and have made

[889] TalkTalk supplementary submission (confidential), 21 May 2013, page 15, Table (3.4).
[890] Banco Espirito Santo, BT Not so Premier League, 25 June 2012.
[891] Morgan Stanley, Alphaeise: BT Sport A Tough Sell but With Long Term Benefits, 6 June 2013.
[892] TalkTalk supplementary submission (confidential), 21 May 2013, page 15, Table (3.4).
[893] Banco Espirito Santo, BT Not so Premier League, 25 June 2012.

adjustments where we considered it reasonable to do so, as set out at paragraphs A3.9 and A3.12.

A3.242 In relation to BT Sport transmission and distribution costs, as we explain in detail above in paragraphs A3.135 through A3.197, we have verified BT's cost estimates against the charges BT agreed to pay under the contracts with third parties. We note that the majority of transmission and distribution costs are not variable with the number of subscribers. In addition, they are determined upfront by the terms set out in the agreements between BT and third parties and in most cases are paid in monthly instalments over the duration of the contract. Therefore, although we acknowledge that BT may be expected to adjust some of its cost forecasts over time (and once its sports business matures), we would not expect transmission and distribution costs to vary significantly.

A3.243 BT Sport SG&A costs are also reported in the BT Sport business case. To date, BT's estimates of the SG&A costs are the only data source available. We also note that these costs are more likely to vary over time. For instance, BT's Updated Forecasts report higher marketing costs but lower costs in relation to billing and customer services. We acknowledge that as these costs relate to a new business, there may be some uncertainty as to what these costs should be in the long run. However, SG&A costs account for approximately [✂] per cent of the entire BT Sport costs stack, therefore, the impact any variation may have on the results is limited.

A3.244 Finally, as explained in paragraphs A3.120 and A3.121, for the purpose of assessing the May 2013 offer, we relied on the content rights budget that BT was committed to at the time it announced BT Sport prices. We have excluded any speculative spend or spend on rights that BT acquired subsequently. We consider that this most closely reflects the costs of an EEO seeking to replicate BT's SFBB offer at the time when the BT Sport offer was announced, i.e. in May 2013.

BT Sport monthly net costs in relation to BT's May 2013 offer

A3.245 Below we summarise the average monthly BT Sport costs, revenues and the resulting average monthly net costs for each year in 2013-2016 that we use to assess the May 2013 offer. As explained in paragraphs A3.88, A3.112 and A3.116, this assumes that the revenues from BT Sport, as well as the one-off launch costs are smoothed over a three year period; while the costs of rights payments are spread evenly over the duration of each set of sports rights.

Table A3.42: BT Sport forecast monthly costs, revenues and net costs, based on Launch Forecasts

Net costs, monthly average	2013/14	2014/15	2015/16
BT Launch Forecast, net costs	**£[✂]**	**£[✂]**	**£[✂]**
Ofcom assessment, net costs	**£[✂]**	**£[✂]**	**£[✂]**
Costs	£[✂]	£[✂]	£[✂]
Revenues	£[✂]	£[✂]	£[✂]

A3.246 We note that the BT Sport costs remain relatively stable over time, due to the way we define and treat the one-off costs related to the channel launch. Based on the Launch Forecasts the total costs are around £[✂] - [✂] per month. Therefore, the net costs vary little over time. As explained in paragraph A3.15, we considered that we should base our analysis of the May offer on the estimates for 2013/14. In 2013/14, the net costs are £[✂] per month. If we were to use this amount for the net costs for 2014/15 or 2015/16, the monthly net costs would be up to £[✂] higher. We consider this in our sensitivity analysis in paragraph 7.46.

A3.247 As an additional sensitivity, we have also considered the impact of spreading the one-off costs and revenues over longer than three years. Given BT's acquisition of the UEFA Champions League and UEFA Europe League rights, it may be arguable that it would be reasonable to consider that the BT Sport investment is a longer term venture and some of the one-off launch costs may be recovered over a longer time period. If the one-off launch costs and revenues were spread over five years instead of three years, this would reduce our calculation of the net costs that need to be recovered over the three year period from 2013/14 to 2015/16, by £[✂] per month. We have included this sensitivity in our sensitivity analysis in paragraph 7.44.

A3.248 In addition to spreading the one-off launch costs and revenues over a longer period, we have also considered a scenario where the BT Sport investment has a terminal value at the end of the relevant period. As explained in paragraph 6.50, we consider an estimate for the terminal value of the BT Sport investment based on the price that BT agreed to pay for the ESPN business, i.e. a business with a comparable content proposition but where the FAPL rights have already expired. If we assumed that BT, over the five year period, does not have to recover £[✂], i.e. the price it agreed to pay for ESPN, this would reduce the monthly net costs over the three year period from 2013/14 to 2015/16, by £[✂] per month. We have included this sensitivity in our sensitivity analysis in paragraph 7.44.

A3.249 We also note that when BT updated its Launch Forecasts, [✂], mainly because of the [✂]. Therefore, BT's Launch Forecasts may understate the most up-to-date costs of BT Sport. In addition, as we explain in detail below in paragraphs A3.255 through A3.274, BT's Launch Forecasts overestimate the actual revenues of BT Sport from residential customers on Sky and commercial premises. We have considered it appropriate to take into account these higher than expected costs and lower than expected revenues in the assessment of BT's January 2014 offer.

A3.250 As explained in paragraph 7.25, we also assess BT's May 2013 offer using our estimates of BT Sport net costs under the current performance adjusted scenario.

As we explain below, these estimates are based on BT Sport costs, as derived from its Updated Forecasts, BT's most up-to-date committed budget for BT Sport content costs, and BT Sport revenues, adjusted to the current performance. In practice, this sensitivity involves applying BT Sport net costs under the current performance adjusted scenario (the BT Sport costs estimated for the January 2014 offer) to the May 2013 offer monthly headroom.

BT's January 2014 offer – BT Sport net costs based on Updated Forecasts adjusted to current performance

A3.251 As explained previously, BT Sport [✂]. Therefore, we consider that assessing BT's margins on the basis of these BT Sport revenue forecasts may [✂] the net costs of BT Sport. As explained in paragraphs 6.68 and 6.69, when assessing BT's January 2014 offer, which was announced six months after the launch of BT Sport, we consider it appropriate to adjust BT's forecasts for BT Sport to reflect the actual performance of the channels. We explain how we have done this in detail below.

A3.252 In deciding how to adjust BT's Updated Forecasts to the current performance of the channels, we have considered the actual subscription volumes of BT Sport. The actual data on BT Sport covers a relatively short period of time from August 2013 to January 2014. We recognise that this data may reflect the BT Sport business at an early stage and that there is a degree of uncertainty as to future BT Sport performance.

A3.253 [✂], the data suggests that BT Sport take-up among these customer groups has been steadily growing over the period from August 2013 to January 2014. We consider it reasonable to expect some further growth in these revenues during the period over which we assess the net costs of BT Sport (i.e. until 2015/16). [✂]. We have therefore sought to adjust BT's Updated Forecasts to produce what we consider to be a reasonable forecast aligned with actual performance of BT Sport.

A3.254 We set out below the adjustments that we have made to BT's forecasts of BT Sport direct revenue to align them more closely to the current BT Sport performance, with reference to the actual BT Sport take-up in the last two months for which we had data available, i.e. December 2013 and January 2014. Our general approach was to project the growth in BT Sport volumes beyond the actual levels in December 2013 and then check our projections against the data observed in January 2014.

Monthly subscription revenues from residential customers

'Paying' residential subscribers on Sky

A3.255 Figure A3.1 shows [✂] [894] [✂]. [895] This shows that [✂]. As at the end of December 2013, actual paying Sky [✂].

[894] BT's response to 7th s26 Notice, Q13, 13 December 2013.
[895] BT's response to 9th s26 Notice, Q19, 18 February 2014.

A3.256 We also note that BT Sport actual take-up among paying Sky subscribers has [✂] been increasing over time. Given the early stage of the business, we consider that it would be reasonable to assume some further growth in revenues during the period over which we are assessing the net costs of BT Sport (i.e. until 2015/16).

A3.257 We note that volumes would need to [✂].

Figure A3.1- BT Sport take-up among 'paying' residential subscribers on Sky: BT's Updated Forecasts and actual volumes

[✂]

A3.258 We have therefore assumed that the take-up on Sky will grow by [✂] per cent by 2015/16. [✂].

A3.259 We note that actual performance in January 2014 shows an increase of nearly [✂] per cent in one month in paying subscriber numbers on Sky suggesting that our assumption of [✂] per cent growth to 2015/16 is likely to be attained in the next few months. Based on BT's Updated Forecasts, BT expected to reach the average 2015/16 volumes by the end of [✂]. Therefore, we have also assumed that BT will reach the projected growth of [✂] per cent by [✂]. We note however that the decision on the timing of growth has very immaterial impact on our results.

A3.260 Based on volumes as at the end of December 2013, BT received £[✂] in monthly subscriptions from paying subscribers on the Sky platform. Based on volumes at the end of January 2014, these revenues increased to £[✂]. Following the assumptions of [✂] per cent additional growth from December 2013, which would be attained by the end of [✂], we estimate the average monthly revenues from paying Sky subscribers as being £[✂] in 2013/14, £[✂] in 2014/15 and £[✂] in 2015/16.

A3.261 As we explain in paragraph 7.44, as a sensitivity we have considered higher growth of the residential subscriptions on Sky over the period to 2015/16, of [✂] per cent which would be attained, as before, by [✂]. This would increase our estimates of the average monthly revenues from paying Sky residential subscribers to £[✂] in 2013/14, £[✂] in 2014/15 and £[✂] in 2015/16. As we show in paragraph 7.44, this would have an immaterial impact on our results.

HD revenues from 'free' subscribers on Sky and on BT TV

A3.262 A full adjustment of monthly residential subscription revenue based on current performance also requires us to make an assumption about the revenue from customers on Sky TV and on BT TV that pay £3 (including VAT) per month for BT Sport HD.

A3.263 Based on the actual BT Sport take up in January 2014, [✂] per cent of BT Sport subscribers that were eligible to receive BT Sport HD have chosen to subscribe to it.[896] This includes [✂] per cent that receive HD for free and [✂] per cent that pay for it.

A3.264 We understand that BT began to charge all its HD customers in August 2014, when the period of free BT Sport HD came to an end.[897] Therefore, we consider that it is reasonable to assume that a proportion of customers currently receiving HD for free will choose to pay for BT Sport in HD, and hence the current [✂] per cent of those subscribers that pay for BT Sport HD will increase. We note that unlike speculative price increases in the future that are not in the current BT Sport offer, the expiry of the period of free BT Sport HD is part of the current offer. Therefore, we consider that future BT Sport HD revenues after the expiry of the Early Bird offer are relevant to our assessment of BT's margins.

A3.265 We note that the HD revenue forecasts would also depend on the assumptions on the total volumes of BT Sport subscribers that are eligible to take the HD offer (both including 'paying' subscribers on Sky and 'free' subscribers on Sky and BT TV). As set out above, we adjust BT's Updated Forecasts of 'paying' subscribers to align them with BT Sport current performance in December 2013 and January 2014. In addition, we have also compared BT's Updated Forecasts of the overall base of 'free' subscribers on Sky and BT TV via multicast with the actual take-up data. As shown in Table A3.43, to the end of January 2014, BT's Updated Forecasts are closely aligned with the actual volumes of these 'free' subscribers.

[896] BT's response to 9th s26 Notice, Q19, 18 February 2014.
[897] BT's response to 4th s 26 Notice, Q2, 10 July 2013.

Table A3.43: BT's volume forecasts and the actual take up of 'free' subscribers to BT Sport on Sky and BT TV.

Free' Subscribers on Sky TV and BT TV ('000)	Aug-13	Sept-13	Oct-13	Nov-13	Dec-13	Jan-14
BT – Updated Forecasts	[✂]	[✂]	[✂]	[✂]	[✂]	[✂]
Actual volumes	[✂]	[✂]	[✂]	[✂]	[✂]	[✂]

A3.266 BT's Updated Forecasts also suggest that the total base of 'free' subscribers on Sky TV and BT TV via multicast would grow by an additional [✂] per cent to reach the average volumes in 2015/16. If a proportion of these additional 'free' subscribers would also opt to take BT Sport in HD, this would result in higher HD revenues than we estimate on the basis of current take-up in January 2014.

A3.267 As it is a new product, it may be difficult to predict precisely how the HD take-up will change over time. We also note that this item of HD revenue from BT Sport 'free' subscribers is relatively immaterial, reflecting less than [✂] per cent of the current monthly direct revenue of BT Sport. As such, the decision on how much growth to allow in the HD revenues from 'free' BT Sport subscribers would not materially affect our results. Therefore, for the purposes of our assessment, we have assumed that the HD take-up remains at its levels in January 2014.

A3.268 Below we summarise our current performance adjusted estimates of BT Sport revenues from monthly residential subscriptions. We also compare it against the revenue forecasts in BT's Updated Forecasts.

Table A3.44: BT Sport forecast revenues from monthly residential subscriptions, based on Updated Forecasts adjusted to current performance

Residential subscription revenues, monthly average	2013/14	2014/15	2015/16
BT – Updated Forecasts	**£[✂]**	**£[✂]**	**£[✂]**
Ofcom – Current Performance Adjusted	**£[✂]**	**£[✂]**	**£[✂]**
Difference	£[✂]	£[✂]	£[✂]

A3.269 In the sensitivity analysis presented in paragraph 7.44, we have also considered the impact on our results if we assumed that the current HD revenues double as at the end of August 2014. Such would be the case if, for example, approximately a third of the BT Sport subscribers receiving BT Sport HD for free on Sky (nearly [✂] per cent of the customers eligible to receive it on the Sky platform as in January 2014) and on BT TV multicast (over [✂] per cent of the customers eligible to receive it on the BT TV multicast platform as in January 2014) would choose to pay for it starting

from August 2014. As we show in paragraph 7.44, this would have an immaterial impact on our results.

Monthly subscription revenues from commercial premises

A3.270 Actual BT Sport revenues from commercial premises are [✂]. Figure A3.2 compares BT Sport actual commercial revenues with the revenues estimated on the basis of BT's Updated Forecasts.[898] It suggests that the current commercial revenues of £[✂] as of December 2013 [✂].

A3.271 Similarly to the revenues from the residential subscribers on Sky, they have been steadily growing over time and we consider that it is likely that they will continue to grow in the future. Based on BT's Updated Forecasts these revenues are anticipated to grow by [✂] per cent between December 2013 and the end of 2015/16. BT's Updated Forecasts suggest that most of this growth will be attained by [✂].

A3.272 We have assumed that these revenues will grow by an additional [✂] per cent by 2015/16. [✂]. In January 2014, these revenues already increased by an additional [✂] per cent. In line with BT's Updated Forecasts, we have assumed that the [✂] per cent growth will occur by between December 2013 and [✂].

A3.273 On this basis, for the purposes of our assessment of the January 2014 offer, we use average monthly revenues of BT Sport from commercial premises of £[✂] in 2013/14, £[✂] in 2014/15 and £[✂] in 2015/16.

[898] As explained in paragraphs A3.70 and A3.71, we adjust BT's forecasts from commercial premises to exclude the ARPU increases in [✂] and in [✂].

Figure A3.2 – BT Sport revenues from commercial premises: BT's Updated Forecasts and actual performance

[✂]

A3.274 Below we summarise our current performance adjusted estimates of BT Sport revenues from monthly commercial subscriptions. We then set them against the revenue estimates based on BT's most recent, Updated Forecasts.

Table A3.45: BT Sport forecast monthly revenues from commercial premises, based on Updated Forecasts adjusted to current performance

Commercial Revenues, monthly average	2013/14	2014/15	2015/16
BT – Updated Forecasts	**£[✂]**	**£[✂]**	**£[✂]**
Ofcom – Current Performance Adjusted	**£[✂]**	**£[✂]**	**£[✂]**
Difference	£[✂]	£[✂]	£[✂]

Advertising revenues

A3.275 As explained in paragraph A3.79, the actual advertising revenues have been steadily growing over the period from the launch of the channels in August. As at the end of January they were at £[✂] per month.

A3.276 For the purpose of our assessment of the January 2014 offer, we assume that revenues from advertising will remain at their current level. We acknowledge that it is possible that BT Sport advertising revenues will increase further, e.g. if the

audience grows and makes the channels more attractive to advertisers. However, it is difficult to predict how the advertising revenues will grow over the period to 2015/16. Therefore, for the purposes of our no grounds for action decision, we have not included any further growth in these revenues over the period to 2015/16. As such, the average monthly revenues for 2013/14 are £[✂] (taking into account lower revenues in the launch period) and £[✂]for 2014/15 and 2015/16.

A3.277 We note that, as shown in the table below, our current performance adjusted scenario, the average monthly revenue projections are slightly higher than those based on the Updated Forecasts, at least for the first two years.

Table A3.46: BT Sport forecast monthly advertising revenue, adjusted to current performance

Advertising revenues, monthly average	2013/14	2014/15	2015/16
BT – Updated Forecasts	**£[✂]**	**£[✂]**	**£[✂]**
Ofcom – Current Performance Adjusted	**£[✂]**	**£[✂]**	**£[✂]**
Difference	£[✂]	£[✂]	£[✂]

BT Sport costs

A3.278 As with the Launch Forecasts, we have verified, to the extent possible, the Updated Forecasts of BT Sport costs with other data sources (see paragraphs A3.135 through A3.197 for detail). We have made adjustments where we considered it reasonable to do so, such as excluding uncommitted content spend or distinguishing between ongoing and one-off costs.

A3.279 As noted at paragraph A3.149, our assumptions in relation to BT Sport volumes also affect our estimates of some volume sensitive costs, such as the CA and [✂] charges. We therefore re-estimate the CA and [✂]fees for the purposes of our assessment of the January 2014 offer, based on our current performance adjusted volume forecasts set out at paragraphs A3.258, A3.259, A3.267 and A3.272.

A3.280 In the table below we summarise the CA and [✂] costs that are calculated based on our assumptions on BT Sport volumes in the current performance adjusted scenario. We then compare it against our estimates based on BT's Updated Forecasts. For the purposes of our assessment of the January 2014 offer, we use the figures based on our estimate of current performance.

Table A3.47: BT Sport forecast monthly CA and [✂] costs, based on Updated Forecasts adjusted to current performance

CA and [✂] costs, monthly average	2013/14	2014/15	2015/16
BT – Updated Forecasts	**£[✂]**	**£[✂]**	**£[✂]**
Ofcom – Current Performance Adjusted	**£[✂]**	**£[✂]**	**£[✂]**
Difference	£[✂]	£[✂]	£[✂]

BT Sport monthly 'net costs' in relation to BT's January 2014 offer

A3.281 As explained in paragraph A3.254, our assumptions for the purpose of our assessment of the January 2014 offer allow for some growth in BT Sport direct revenue from paying subscribers on Sky and commercial premises. We estimate that the total revenues will grow over time, from £[✂] average monthly in 2013/14 to £[✂] average monthly in 2015/16. As before, we consider that we should adjust these revenues in order to smooth them over time (see paragraph A3.11). We estimate that the current performance adjusted revenues are equivalent in net present value terms to a constant stream of monthly revenues of £[✂] over the period from August 2013 to March 2016.

A3.282 We summarise below the average monthly BT Sport costs, revenues and the resulting 'net costs' in relation to the January 2014 offer for each year in 2013-2016. As before, BT Sport costs are estimated under the assumption that the one-off launch costs are spread evenly over three years while the costs of rights payments are spread evenly over the duration of rights.

Table A3.48: BT Sport forecast monthly costs, revenues and net costs, based on Updated Forecasts adjusted to current performance

'Net costs', monthly average	2013/14	2014/15	2015/16
BT – Updated Forecasts	**£[✂]**	**£[✂]**	**£[✂]**
Ofcom – Current Performance Adjusted 'Net costs'	**£[✂]**	**£[✂]**	**£[✂]**
Costs	£[✂]	£[✂]	£[✂]
Revenues	£[✂]	£[✂]	£[✂]

A3.283 As explained in paragraph A3.14, in our current performance scenario we adopt BT's estimates for BT Sport costs, as derived from its Updated Forecasts. As before, we adjust BT's forecasts to take into account the one-off channel launch costs, which would result in smoother cost estimates than those reported by BT. Nevertheless, our cost estimates to some extent vary over time. Based on the Updated Forecasts, BT Sport costs are in the range from £[✂] to £[✂]. The variation is mainly explained by slightly higher transmission and distribution as well as SG&A costs in the second year.

A3.284 As explained in paragraph A3.15, we base our assessment on the 'net costs' estimates for 2013/14 of £[✂], as we consider these estimates to be most relevant to our period of investigation. However, we also conduct a sensitivity analysis by using the higher of the 2014/15 and 2015/16 estimates, suggesting the costs may increase to £[✂]. This is set out in our sensitivity analysis in paragraph 7.46.

A3.285 Additionally, as with the May 2013 offer, we have considered as a sensitivity the effect of spreading the one-off costs and revenues over a five year period. This would reduce our assessment of BT's monthly net costs by approximately £[✂] per month, to £[✂] in 2013/14, £[✂] in 2014/15 and £[✂] in 2015/16. As explained in paragraph A3.248, if we also assumed that the BT Sport investment will have a terminal value of £[✂] (i.e. the price of ESPN) at the end of the relevant period, then this would reduce the monthly net costs by £[✂] per month. Again, we set this out in our sensitivity analysis in paragraph 7.44.

BT Sport 'net costs' per SFBB subscriber

A3.286 As explained in paragraph 6.36, we consider that the BT Sport 'net costs' should be recovered from the margins of BT SBB and SFBB customers who have access to these channels for 'free'. We identify in paragraphs 6.74 to 6.81 three possible approaches to the recovery of the net costs from SFBB customers.

A3.287 As explained in paragraphs 6.74 to 6.81, the first allocation and second allocation approaches we identified in relation to the recovery of the net costs of BT Sport are based on two alternative allocations of the net costs between SBB and SFBB. The first allocation approach allocates BT Sport net costs across all BT SBB and SFBB customers in proportion to the number of SBB and SFBB customers that are eligible to receive BT Sport for free (i.e. customers who subscribe to BT branded broadband). The second allocation approach allocates BT Sport net costs based on the share of BT broadband subscribers to BT Sport that take SFBB.[899]

A3.288 For both the first allocation and second allocation approaches we first calculate the 'net costs' that need to be recovered per SFBB customer who has access to BT Sport for free (net cost per customer with free access to BT Sport). As we assess BT's margins across the entire SFBB portfolio increment, which includes customers who have free access to BT Sport (Infinity customers) and those who do not have free access (Plusnet Fibre customers), we need to carry out an additional step to calculate the net cost of BT Sport per SFBB portfolio customer. In order to calculate the net cost of BT Sport per SFBB portfolio customer, we multiply the net cost per customer with free access by the proportion of SFBB portfolio customers who have free access to BT Sport. We have estimated that about [✂] per cent of the SFBB portfolio is made up of Plusnet Fibre customers and have consequently multiplied the net cost per customer with free access by approximately [✂] per cent.

[899] In line with the approach set out in paragraph 6.36, we exclude customers with a broadband connection that is too slow to receive BT Sport at a reasonable quality on any device. We note that BT's website states that connection speeds of 400Kbit/s and faster can receive BT Sport (http://sport.bt.com/pages/sport/BT-Sport-app-and-online-player/index.html). We however use a slightly higher figure of 500Kbit/s to ensure that losses of speed due to average modem sync speeds and wireless overheads are taken into account. Data from the Ofcom Infrastructure Report 2013 indicates that [✂] per cent of BT's SBB customers have a connection speed which is slower than 500Kbit/s, see http://stakeholders.ofcom.org.uk/binaries/research/telecoms-research/infrastructure-report/IRU_2013.pdf

A3.289 We apply the allocation methods in the first allocation and second allocation approaches to the total net costs of BT Sport that are recovered from broadband (except for the DTT costs that are directly attributable to only those BT Sport customers that take BT's SBB services and receive the channels for free via the DTT platform, and which therefore were excluded from the costs allocated to SFBB).

A3.290 For both the first allocation and second allocation approaches, we have used the actual data on BT's current subscriber base to allocate BT Sport costs to SFBB and SBB.

A3.291 For the second allocation approach, allocation based on take-up, given that all BT Sport costs, except for the CA and [✂] costs, are shared across the different groups of BT Sport subscribers, we have used the average share of SFBB customers on all the delivery platforms. As for the CA and [✂] costs, [✂]. Therefore, we have allocated these costs on the basis of SFBB's share of 'free' BT Sport subscribers on Sky.

A3.292 Specifically, for BT's May 2013 offer, we have used BT's broadband base as at the end of June 2013. For BT's January 2014 offer, we have used BT's broadband base as at the end of December 2013. As discussed in paragraph 6.84 we also calculate a sensitivity in which we exclude from BT's SFBB base those SFBB customers that subscribed to BT broadband for the first time and also took BT Sport and those customers that BT retained by offering BT Sport for 'free'.

BT's May 2013 offer – BT Sport net cost per SFBB user

A3.293 As explained in paragraph 6.75, the first allocation approach involves allocation of BT Sport net costs in proportion to the number of SFBB and SBB customers in BT's entire broadband base. As of June 2013, [✂] per cent of BT's broadband base were SFBB customers, implying that under this approach, [✂] per cent of BT Sport net costs should be allocated to SFBB. As of June 2013, BT reported approximately [✂] SFBB customers that were eligible to the BT Sport 'free' offer and which made up [✂] per cent of BT's entire SFBB portfolio, as explained in paragraph A3.288.[900] Under this approach, spreading [✂] per cent of BT Sport net costs over BT's SFBB base including Plusnet, would result in a monthly net cost per SFBB portfolio customer in 2013/14 of £[✂].

Table A3.49: BT Sport forecast monthly net cost per SFBB customer, based on Launch Forecasts, first allocation approach

Monthly average	2013/14	2014/15	2015/16
'Net costs' per SFBB customer	**£[✂]**	**£[✂]**	**£[✂]**

[900] BT's response to 9th s26 Notice, Q4, Q5 and Q16, 21 February 2014.

A3.294 Under the second allocation approach, involving allocation based on take-up, we have allocated BT Sport net costs, calculated on the basis of BT's Launch Forecasts subject to the appropriate adjustments set out in paragraphs A3.8 to A3.12, based on the SFBB share among BT Sport 'free' customers at the launch of channels, i.e. in September.[901] Based on the actual BT Sport volume data submitted by BT, as of September, [✂] per cent of BT Sport 'free' subscribers were taking BT SFBB services. This implies that [✂] per cent of the 'net costs' need to be recovered from the margins of BT's SFBB customers under this approach. In relation to the CA and [✂] fees, [✂] per cent of these costs were allocated to SFBB on the basis of SFBB share among 'free' subscribers on Sky.

A3.295 Below we summarise the estimated monthly 'net costs' per SFBB customer once they are spread over BT's SFBB base including Plusnet as in June 2013. In the scenario where BT Sport direct revenues are smoothed over time, the estimated monthly 'net costs' per SFBB portfolio customer in 2013/14 are £[✂].

Table A3.50: BT Sport forecast monthly net cost per SFBB customer, based on Launch Forecasts, second allocation approach

Monthly average	2013/14	2014/15	2015/16
'Net costs' per SFBB customer	**£[✂]**	**£[✂]**	**£[✂]**

BT's January 2014 offer – BT Sport net cost per SFBB

A3.296 In terms of the current performance adjusted scenario, under the first allocation approach, where the net costs of BT Sport are allocated in proportion to the number of SBB and SFBB customers in BT's entire broadband base as at the end of December 2013, [✂] per cent of the BT Sport net costs would be allocated to SFBB. We have then spread the respective allocation of BT Sport 'net costs' over [✂] of BT's SFBB customers as of December 2013 that were eligible to access 'free' BT Sport taking into account that these customers represent [✂] per cent of the entire SFBB portfolio.[902] Under the first allocation approach the monthly net cost per SFBB customer in 2013/14 would be £[✂].

Table A3.51: BT Sport forecast monthly net cost per SFBB customer, based on Updated Forecasts adjusted to current performance, first allocation approach

Monthly average	2013/14	2014/15	2015/16
'Net costs' per SFBB customer	**£[✂]**	**£[✂]**	**£[✂]**

A3.297 For the current performance adjusted scenario under the second allocation approach, allocation based on take-up, we have also used the SFBB share of BT Sport customers that is based on the most recent actual volume data, as of January

[901] We note that for consistency with the data on SFBB base, we could allocate BT Sport net costs based on SFBB share in June 2013. However, the channel was not launched until August 2013. Therefore, we base our estimates on the SFBB share as at the end of September 2013, noting that over the six months for which we had the actual data, it remained very stable over time.
[902] BT's response to 9th s26 Notice, Q4, Q5 and Q16, 21 February 2014.

2014, i.e. [✂] per cent overall and [✂] per cent on the Sky platform. We have then spread the respective allocation of BT Sport 'net costs' over BT's SFBB base including Plusnet, as explained in paragraph A3.288.[903]

A3.298 We estimate that the monthly 'net costs' that need to be recovered from an average BT SFBB customer margin, once the revenues are smoothed over time, are £[✂] , based on estimates for 2013/14.

Table A3.52: BT Sport forecast monthly net cost per SFBB customer, based on Updated Forecasts adjusted to current performance, second allocation approach

Monthly average	2013/14	2014/15	2015/16
'Net costs' per SFBB customer	**£[✂]**	**£[✂]**	**£[✂]**

A3.299 In our negative sensitivity analysis, which we conducted only on the margins resulting from the second allocation approach (as these produced the lowest figures) we have excluded from BT's SFBB base our estimate of those customers that BT gained as a result of the BT Sport offer. For this we used two sets of data.

A3.300 First, we excluded those new SFBB customers that BT has acquired as a result of BT Sport. In order to do this, we used the actual data on BT Sport take-up. This data distinguishes between existing BT broadband customers and those that are new to BT broadband. As at the end of November 2013, which is the last month for which BT submitted to Ofcom the data in this form, BT estimated that approximately [✂] of BT Sport 'free' subscribers were new to BT's SFBB services.[904] We estimate that this represents approximately [✂] per cent of the entire BT SFBB base that takes BT Sport. If the same [✂] per cent is applied to the number of SFBB customers that took BT Sport in December 2013, it would imply that as many as approximately [✂] SFBB subscribers could have been acquired by BT as a result of BT Sport since its launch. Therefore, in relation to the January 2014 offer, excluding these customers would reduce BT's SFBB base over which we spread the 'net costs' (under the second allocation approach, the take-up allocation method) by [✂].

A3.301 Second, we excluded those SFBB customers that BT has retained as a result of BT Sport. The best available indicator of this is BT's volume forecasts, which included BT's estimates of what this retention would be. We note that in BT's Updated Forecasts, the number of BT Sport subscribers that take BT Sport with BT broadband services is closely aligned with the actual data (see paragraph A3.265 and Table A3.43). These forecasts estimate that the number of retained customers in SFBB as a result of BT Sport is [✂] as at the end of December 2013. Excluding these retained customers does not materially affect our results.[905]

[903] BT's response to 9th s26 Notice, Q4, Q5 and Q16, 21 February 2014.
[904] This includes £[✂] of customers that regraded to BT's SFBB from other BT's retail products.
[905] In relation to the May 2013 offer, we estimate that by the end of June 2013, BT acquired [✂] new SFBB customers. Based on BT's Updated Forecasts, it did not expect to retain any SFBB customers as a result of BT Sport from its launch to June 2013. We exclude these customers in the sensitivity analysis of our assessment of the May 2013 offer but note that this has very immaterial impact on our results (increases net costs per SFBB customer in 2013/14 by £[✂]).

A3.302 Below we summarise the net costs per SFBB customer, once the new or retained customers are excluded from our analysis of the January 2014 offer under the second allocation approach. We note that this would increase the net cost per SFBB customer in 2013/14 by £[✂] based on the take-up allocation. We have not tested the impact of excluding new or retained customers, which is a negative sensitivity, under the first allocation approach. As explained in paragraph 7.43, we calculate the magnitude of these negative sensitivities relative to our assessment of BT's margins based on the second allocation approach.[906]

Table A3.53: BT Sport forecast monthly net cost per SFBB customer, based on Updated Forecasts adjusted to current performance, excluding new and retained SFBB customers, second allocation approach

Monthly average	2013/14	2014/15	2015/16
'Net costs' per SFBB customer allocated based on take-up of BT Sport as between SBB and SFBB	**£[✂]**	**£[✂]**	**£[✂]**

[906] Conversely, we calculate the magnitude of the positive sensitivities relative to our assessment of BT's margins based on the first allocation approach.

Annex 4

Glossary

ACL	Average customer lifetime.
the Act	The Competition Act 1998.
ADSL	Asymmetric Digital Subscriber Line. A data communications technology that enables data transmission over copper telephone lines.
ADSL2	Second generation of ADSL technology, with faster speeds.
[✂]	[✂]
[✂]	[✂]
Article 82 EC	Article 82 of the EC Treaty, which provides that "*any abuse by one of more undertakings of a dominant position within the common market or in a substantial part of it shall be prohibited as incompatible with the common market in so far as it may affect trade between Member States*".
Article 102 TFEU	Former Article 82 EC. The Treaty of Lisbon came into force on 1 December 2009 amending (but not replacing) the EC Treaty with the Treaty on the Functioning of the European Union.
ASPIRE	BT system for reporting unit retail call costs, part of BT's regulatory accounting information, [✂].
Aviva Premiership Rugby	A professional league competition for rugby union football clubs in the top division of the English rugby union system. The competition is currently known as Aviva Premiership Rugby because of the league's sponsorship by Aviva.
Barclays Premier League	The Premier League is an English professional league for men's association football clubs. At the top of the English football league system, it is the country's primary football competition. Contested by 20 clubs, it operates on a system of promotion and relegation with the Football League. It is currently sponsored by Barclays Bank and thus officially known as the Barclays Premier League.
BBC	British Broadcasting Corporation. A British public service broadcasting statutory corporation.
BCMR	Business Connectivity Market Review.
BRF	BT bi-annual rolling forecasts of costs and revenues for each item in its management accounts for the following financial year.

broadband	A service or connection which is capable of supporting always-on services which provide the end user with high data transfer speeds.
Broadband Boost	A product supplied by Openreach to investigate special faults.
Broadband Delivery UK (BDUK)	Broadband Delivery UK is a team within the Department for Culture, Media and Sport that has a role to set up, operate, monitor and act as the national competence centre for the UK-wide broadband state-aid scheme, as this has been approved by the European Commission with the State Aid Decision SA.33671 (2012/N).
BT	BT Group plc and any subsidiary or holding company thereof including, for the sake of doubt, British Telecommunications plc and BT Wholesale.
BT Answer 1571	BT's answerphone service.
BT Basic	A low cost calling plan for those on low incomes.
BT Business	BT Retail division providing retail services, including broadband, to business and corporate customers.
BT Cloud	BT's data storage service, providing auto backup of files, folders and photos in a single location.
BT Consumer	BT Retail division providing retail services, including broadband, to residential customers.
BT Family Protection	A BT product/service that is bundled with its broadband packages, using McAfee software to provide internet content filters.
BT Innovate & Design (BTID)	A BT TSO predecessor. Partially merged with BTO to form BT TSO.
BT Model, the Model	BT's internal financial model, setting out information on VULA and downstream product costs and prices, supplied in response to our first section 26 notice.
BT Openreach	BT's infrastructure division, established in 2006 following an agreement between BT and Ofcom to implement undertakings, pursuant to the Enterprise Act 2002, to ensure that rival telecom operators have equality of access to BT's local network.
BT Operate (BTO)	A BT TSO predecessor. Partially merged with BTID to form BT TSO.
BT Privacy with Caller Display	BT's caller display service.
BT Retail	The main retail business of BT, which provides a range of retail

	services to residential, business and corporate customers. BT announced that it would split BT Retail into two separate businesses, BT Consumer and BT Business, from September 2013, though it expected that it would continue to report figures for BT Retail as a whole until the end of the 2013/2014 financial year.
BT Sport	A package of premium BT Sport branded channels, including BT Sport 1, BT Sport 2, BT Sport 1 HD, BT Sport 2 HD and ESPN.
BT's August submission	BT's submission dated 6 August 2014 providing BT's comments on the provisional NGFA.
BT's November submission	BT's submission dated 22 November 2013 in relation to the treatment of BT Sport for the purposes of Ofcom's investigation.
BT supplementary response, supplementary response	BT's response dated 10 June 2013 to TalkTalk's supplementary submission.
BT Technology, Service & Operations (BT TSO)	The service unit responsible for the design and deployment of the platforms, systems and processes that support BT products and services as well as managing BT's voice, data and TV networks and IT applications which make up the core infrastructure for BT's products and services.
BT TV	A subscription IPTV service offered by BT. BT TV is available over the DTT platform using a BT Vision set top box. It is also available over a combination of DTT and Multicast services, using the YouView platform.
BT Vision	Brand name of BT's DTT platform set top TV box used for providing IPTV (to customers signed up to SBB).
BT Wholesale (BTW)	The division that runs BT's network services and sells interconnection products to CPs.
Bundesliga	The professional association football league in Germany.
CA	Conditional access contract terms.
Cardinal	BT's legacy DTT platform.
Chapter II prohibition	A prohibition, under section 18 of the Act, on conduct on the part of one or more undertakings that amounts to the abuse of a dominant position in a market and that may affect trade within the UK (or any part of the UK).
CJEU	Court of Justice of the European Union (formerly known as the European Court of Justice).
CMA	Competition and Markets Authority. The CMA acquired its powers, taking over many of the functions of the OFT and

	Competition Commission, on 1 April 2014.
common costs	Costs which are shared by all the services supplied by a firm.
communications provider (CP)	A person who provides an electronic communications network or an electronic communications service.
complaint	TalkTalk complaint dated 13 March 2013, as revised and updated by TalkTalk on 20 March 2013.
Cost Volume Elasticity (CVE)	A measure of the percentage change in costs for a given change in volumes.
COT	Customer options team. A customer retention activity run within BT's Telesales Centre.
CPE	Customer premises equipment
Current Generation Access (CGA)	Current Generation Access: A copper-based access network that can support a maximum download speed of 24 Mbit/s.
DSAT	Digital satellite.
DTT	Digital terrestrial television.
dual-play	Describes retail bundles that include voice telephony and broadband.
EEO	Equally Efficient Operator.
EOI	Equivalence of inputs.
EPG	Electronic programme guide.
ESG	BT's Executive Steering Group.
ESPN (UK)	Originally an abbreviation for Entertainment and Sports Programming Network. ESPN Inc. is a US-based global cable and satellite television channel. ESPN (UK) is a sports television channel in the UK and Ireland owned by BT Group under licence from American sports broadcaster ESPN Inc. The channel was operated by ESPN from 3 August 2009 to 31 July 2013, when it was sold to BT and became part of its BT Sport package focusing on international sporting events, especially American sports. Programming is available in standard definition and high definition formats.
Ethernet	Ethernet: A packet-based technology originally developed for and still widely used in Local Area Networks. Ethernet networking protocols are defined in IEEE 802.3 and published by the Institute of Electrical and Electronic Engineers.
FA	The Football Association. The FA is the governing body of football in England, and the Crown dependencies of Jersey,

	Guernsey and the Isle of Man. All of England's professional football teams are members of the FA.
FAC	Fully allocated costs. A measure of long run costs which includes an element for the recovery of all non-attributable common costs.
FA Cup	Football Association Cup. The FA runs numerous competitions, the most famous of which is the FA Cup.
FAMR	Fixed Access Market Reviews
FAPL, Premier League	Football Association Premier League. An English professional league for men's association football clubs. At the top of the English football league system, it is the country's primary football competition.
fibre to the cabinet (FTTC)	An access network structure in which the optical fibre extends from the exchange to a flexibility point in the BT access network known as a cabinet. The street cabinet is usually located only a few hundred metres from the subscriber's premises. The remaining part of the access network from the cabinet to the customer is usually copper wire but could use another technology, such as wireless.
fibre to the premises (FTTP)	An access network structure in which the optical fibre network runs from the local exchange to the end user's house or business premises.
first allocation approach	An approach to the recovery of the net costs of BT Sport which allocates those net costs in proportion to the overall number of SFBB and SBB BT broadband subscribers (whether or not those subscribers take BT Sport).
FON network	An initiative which enables its members to share part of their own WiFi broadband capacity to in return get free roaming onto other FON WiFi access points. BT partners with FON to enable the service in its Home Hubs.
[✂]	[✂].
GB	Gigabytes. A byte is a unit of measure for digital information. Used in reference to data transmission over telecommunications networks, a gigabyte is one billion bytes.
General Court	A branch of the CJEU, formerly known as the Court of First Instance. Cases heard by the General Court may be subject to appeal to the CJEU.
General Ledger	Part of BT's internal management accounting system, which collects together data from BT's billing systems, procurement systems and internal costs and revenue systems.
Generic Ethernet	BT's wholesale non-physical product providing CPs with access

Access (GEA)	to higher speed broadband products.
HD	High definition.
Home Hub	A family of wireless residential gateway router modems distributed by BT.
hotspot	A site that offers internet access over a wireless local area network through the use of a router connected to a link to an internet service provider. Hotspots typically use Wi-Fi technology.
Humax	The supplier of BT's YouView boxes.
Infinity	Brand name for BT's range of SFBB products. The range includes Infinity 1, Unlimited Infinity 1, Infinity 2, Infinity 3 and Infinity 4.
IP	Internet Protocol
IPTV	Internet Protocol television. A system through which television services are delivered using the Internet Protocol suite over a packet-switched network such as a local area network or the internet, instead of being delivered through traditional terrestrial, satellite signal, and cable television formats.
ITV	A network of television channels that operate regional television services as well as sharing programmes between each other to be displayed on the entire network.
J.P. Morgan Asset Management Premiership Rugby 7s	A rugby sevens competition for the twelve Aviva Premiership clubs, sponsored by J.P. Morgan Asset Management.
[✂]	[✂].
Launch Forecasts	BT's internal forecasts for BT Sport, produced before the launch of BT Sport.
Ligue 1	The French professional league for association football clubs, serving as the top division of the French football league.
Line Rental Saver (LRS)	A payment scheme offered by BT for line rental, where customers get a discount for paying an annual line rental charge, rather than paying on a monthly basis.
local loop	Generic term applied to the traditional copper twisted pair access network providing connections between customers' telephones and the local telephone exchange.
local loop unbundling (LLU)	A process by which a dominant provider's local loops are physically disconnected, or partially disconnected, from its network and connected to a competing provider's networks. This enables operators other than the incumbent to use the

	local loop to provide services directly to customers.
LRIC	Long run incremental cost. This is the cost of producing a specified additional product, service or increment of output in the long run.
LRIC+	A measure of long run incremental cost which includes an element for the recovery of non-attributable common costs.
Market 1	Market 1 as defined in the 2010 WBA Statement. Market 1 is made up of exchange areas in which BT is the only provider of wholesale broadband services present or forecast to be present. BT has SMP in Market 1.
Market 2	Market 2 as defined in the 2010 WBA Statement. Market 2 comprises exchange areas where there are two significant providers of wholesale broadband services present or forecast to be present and exchange areas where there are three significant providers present or forecast to be present but BT's market share is greater than or equal to 50 per cent. BT has SMP in Market 2.
Market 3	Market 3 as defined in the 2010 WBA Statement. Market 3 comprises exchange areas where there are four or more significant providers of wholesale broadband services present or forecast to be present and exchange areas where there are three significant providers of wholesale broadband services present or forecast to be present but BT's market share is less than 50 per cent.
MB	Megabyte. A measure of digital data size. A multiple of the unit byte for digital information. Used in reference to data transmission over telecommunications networks, a megabyte is a million bytes. A byte is 8 bits.
Mbit/s	Megabits per second. A measure of data throughput or bandwidth in a digital system. A megabit is a million bits. There are 8 bits in one byte.
McAfee	McAfee Inc. a wholly owned subsidiary of Intel Corporation, providing security software.
MFU	BT's market facing units – i.e. BT Retail, BT Global Services, BT Wholesale and BT Openreach.
[✂]	[✂].
[✂]	A BT information system that applies cost-volume relationships to calculations for line connections and takeovers.
MotoGP	The premier class of the Road Racing World Championship Grand Prix, a championship of road motorcycle racing
MPF	Metallic Path Facility. Fully unbundled local loops (see also LLU). This allows a competing provider to wholly lease a

	customer's access line and provide voice and broadband internet services directly to end users.
[✂]	[✂].
Multicast	A technique for one-to-many communication over an IP infrastructure in a network. Multicast uses network infrastructure efficiently by requiring the source to send a packet only once, even if it needs to be delivered to a large number of receivers. The nodes in the network take care of replicating the packet to reach multiple receivers only when necessary.
NBA	National Basketball Association. The pre-eminent men's professional basketball league in North America.
NCA	National competition authority.
NetProtect Plus	BT's anti-virus software, marketed under a licence arrangement with McAfee, and sold as part of the BT Infinity bundles.
Next Generation Access (NGA)	Next Generation Access (NGA) networks: Wired access networks which consist wholly or in part of optical elements and which are capable of delivering broadband access services with enhanced characteristics (such as higher bandwidth) as compared to those provided over already existing copper networks. In most cases, NGAs are the result of an upgrade of an already existing copper or co-axial access network.
Ofcom	The Office of Communications.
OFT	The Office of Fair Trading.
OOP	Out of package. Used in relation to call and data revenues. OOP revenues are earned when customers make calls outside of those included in their call package, or use data that exceeds their monthly data allowance.
Openreach	The division of BT that is responsible for BT's local access telephone network and the installation and maintenance of services over that network. Openreach was launched in January 2006 after Ofcom accepted Undertakings from BT in relation to, among other things, the provision of equal access to BT's local access network to other CPs.
Operational Resource Requirements Plan	An operating system used by BT TSO for resource planning and costing.
[✂]	A BT Openreach management information system.
OTT	Over the top.
Pay TV	Subscription-based television services.

Plusnet	Plusnet plc, a BT subsidiary company, providing retail voice and broadband services, and marketed by BT Consumer as a value brand.
POLOs	Call termination Payments to Other Licensed Operators.
PPF	Payment Processing Fee. A fee charged to customers who do not pay their bills by direct debit or a monthly payment plan.
Premium Hotspots network	One part of the BT WiFi network available to Infinity subscribers. The Premium Hotspots network is made up of Wi-Fi hotspots set up in public places and commercial premises.
PSTN	Public switched telephony network.
PUCs	Product Unit Costs. Charges to BT Retail by BT TSO associated with the conveyance of calls across the BT network.
PwC	PriceWaterhouseCoopers, BT Group auditor.
[✂]	[✂].
regulatory financial statements (RFS)	The financial statements that BT is required by Ofcom to prepare, have audited and publish.
REO	Reasonably Efficient Operator.
BT's response	BT's response dated 2 April 2013 to the complaint.
SBB	Standard broadband.
[✂]	[✂].
Scottish Premier League	The top level league competition for professional football clubs in Scotland.
second allocation approach	An approach to the recovery of the net costs of BT Sport which allocates those net costs in proportion to the number of SFBB subscribers that take BT Sport and the number of SBB subscribers that take BT Sport.
section 26 Notice	A notice under section 26 of the Act requiring a person to produce specified documents or specified information which Ofcom considers relate to any matter relevant to an investigation under section 25 of the Act.
Serie A	The professional league competition for football clubs at the top of the Italian football league system.
Setanta	Setanta Sports. A premium sports broadcaster, broadcasting in Ireland since August 2004.
SFBB	Superfast Broadband (SFBB): A broadband connection that can

	support a minimum download speed of 30Mbps or greater.
SG&A	Sales General and Administration. Part of the BT internal accounting records.
Sky	British Sky Broadcasting Group plc, a satellite broadcasting, broadband and telephone services company headquartered in London, with operations in the UK and Ireland.
SLAs	Service level agreements.
SmartTalk	A BT application which allows smart phone users to make VOIP calls which will be charged as if the customer was using their home phone.
SMP	Significant Market Power. Defined in Article 14(2) of the Framework Directive, which states that: "*an undertaking shall be deemed to have significant market power if, either individually or jointly with others, it enjoys a position equivalent to dominance, that is to say a position of economic strength affording it the power to behave to an appreciable extent independently of competitors, customers and ultimately consumers.*"
SSID	Service set identifier. A unique identifier attached to the header of packets sent over a wireless local area network. The SSID is typically referred to as the "network name".
[✂]	[✂].
TalkTalk	TalkTalk Telecom Group PLC.
TalkTalk September submission, September submission	A submission dated 10 September 2013 from TalkTalk setting out further views on the appropriate treatment of BT Sport.
TalkTalk supplementary submission, supplementary submission	TalkTalk's supplementary submission dated 21 May 2013, supplementing its complaint, setting out its view that changes to BT's retail SFBB products since the complaint had intensified the margin squeeze.
TalkTalk's August submission	TalkTalk's submission dated 29 August 2014, providing TalkTalk's comments on the provisional NGFA.
TB	Terabyte. A multiple of the unit byte for digital information. Used in reference to data transmission over telecommunications networks, one terabyte is a thousand gigabytes.
TFEU	Treaty on the Functioning of the European Union.
[✂]	BT's name for its internal cost and revenue systems.
TLC	Total labour cost. A cost item in BT's management accounts.

triple-play	Describes retail bundles that include voice telephony, broadband and TV.
[✂]	[✂].
TV Essential	BT's entry level TV product.
UEFA Champions League	An annual continental club football competition organised by the Union of European Football Associations (UEFA) since 1992.
UEFA Europa League	The UEFA Europa League is an annual men's association football club competition organized by UEFA since 1971 for eligible European football clubs. Clubs qualify for the competition based on their performance in their national leagues and cup competitions.
UEWP	Unlimited Evening and Weekend call Package. Relates to calls included in packages and bundles.
UFC World Championship, Ultimate Fighting Championship	Ultimate Fighting Championship (UFC) world championship. The UFC is the largest mixed martial arts promotion company in the world. It stages wrestling and other matches.
UK	United Kingdom of Great Britain and Northern Ireland.
Uncostable Calls	Call types that are not costed within BT's database (such as 0844/0871, Premium Rate and Direct Enquiries calls) and so BT assumes that costs equal revenues.
Updated Forecasts	BT's internal forecasts for BT Sport, produced after the launch of BT Sport.
VAT	Value added tax.
VDSL	Very High Bit Rate Digital Subscriber Line.
Virgin Media	Virgin Media Inc.
VoIP	Voice over Internet Protocol. VoIP services enable voice calls and messaging services to be provided over a broadband connection rather than over traditional telephone networks.
VULA	Virtual Unbundled Local Access. An access remedy imposed by Ofcom in the 2010 WLA market review that requires BT to provide access to its NGA network in a way that is similar to LLU.
WBA	Wholesale Broadband Access, is between the WLA market and the retail market for provision of fixed telecommunications services to end users.
WFAEL	Wholesale fixed analogue exchange lines.

Wholesale Broadband Connect	A BT Wholesale Broadband Access product.
Wholesale Broadband Managed Connect (WBMC)	A BT Wholesale Broadband Access product that also makes use of BT's core network.
Wi-Fi	A technology that allows an electronic device to exchange data or connect to the internet wirelessly using microwaves.
WLA	Wholesale local access.
WLR	Wholesale line rental. The regulated wholesale exchange line service provided by BT both to its own downstream businesses and to competing CPs. It is either onward sold to different retail providers, or used by the purchaser to provide retail narrowband access services e.g. a line rental service or as part of a bundle of services. When using WLR providers take on the full retail relationship with the customer and can offer a 'single bill' to end-users. WLR is provided by Openreach. BT is obliged to provide WLR in relation to the wholesale analogue exchange lines, wholesale ISDN2 exchange lines and wholesale ISDN30 exchange lines markets where Ofcom has concluded that it holds SMP.
WTA	Women's Tennis Association, the principal organising body of women's professional tennis.
YouView	An Internet TV service in the UK, formed as a joint venture between three telecommunications companies (BT, TalkTalk and Arqiva) and four broadcasters (BBC, ITV, Channel 4 and Channel 5). YouView provides access to free-to-air DTT channels and to TV on demand services via a 'hybrid' set-top box, connected with both a broadband internet connection and a television aerial. Catch-up and on-demand content is delivered over the internet.
21C	Twenty-first Century Network. BT's network transformation project for data and voice. BT intended to move its network from the PSTN to an IP system. As well as switching over the PSTN, BT planned to deliver many additional services over their new data network.
2013 BCMR Statement	Ofcom's March 2013 Statement on the BCMR.
2013 FAMR Consultation	Ofcom's July 2013 Consultation on the FAMR.
2014 FAMR Statement	Ofcom's 26 June 2014 Statement on the FAMR.
2014 WBA Statement	Ofcom's 26 June 2014 Statement on the WBA market review.
2010 WBA Statement	Ofcom's December 2010 Statement on the WBA market review.

2010 WFAEL Statement	Ofcom's December 2010 Statement on the WFAEL market review.
2010 WLA Statement	Ofcom's October 2010 Statement on the WLA market review.