Expanding access to the 6 GHz band for mobile and Wi-Fi services

Preparing the band for future mobile use

Statement

Published 17 November 2026

For more information on this publication, please visit ofcom.org.uk

Contents

Section

Overview 3

Background 5

High density areas 8

Fixed links 13

Other incumbent users 25

Annex

A1. Legal framework 32

A2. Impact assessments 35

A3. Upper 6 GHz Cost of Fixed Link Clearance Model 44

1. Overview

1.1 The Upper 6 GHz band (6425–7125 MHz) has the potential to deliver significant benefits to UK consumers by enhancing Wi-Fi and mobile services, supporting economic growth, and enabling a wide range of innovative services. In our July 2026 Statement we set out our decision that Wi-Fi and mobile will share this band using a prioritised band split:

- Wi-Fi will have priority in the lower 160 MHz of the band (6425–6585 MHz), and will be able to use the remainder of the band in places and channels where mobile has not been deployed.
- Mobile will have priority in the upper 540 MHz of the band (6585–7125 MHz).

1.2 As set out in our January 2026 Statement and Consultation, the award for the mobile priority portion of the band will be sub-national. The characteristics of the band make it well suited to provide additional capacity in areas where high volumes of data traffic are concentrated in a relatively small geographic footprint, predominantly urban areas. These are also the areas with the most need for additional mobile capacity.

1.3 In our April 2026 Consultation, we proposed a set of high density areas ("HD areas") which would form the basis for a future Upper 6 GHz mobile award; these are an expanded version of those used in the mmWave spectrum award. We proposed to use them also as the basis for clearing those fixed links which are currently using the Upper 6 GHz band in and around HD areas and are incompatible with mobile deployments.

What we have decided – in brief

- To adopt the 88 "6 GHz high density areas" proposed in our April 2026 Consultation as we consider this is where additional mobile capacity is most needed.
- To start the process for revoking 156 fixed links (down from the 206 we indicated in the April 2026 Consultation) that we consider are incompatible with mobile deployment in those areas.
  - We have allowed a small number of fixed links previously subject to revocation to remain in the band, and we will require mobile operators to protect these. These are links where there is limited impact on mobile deployment from preserving them.
  - We will also stop issuing new fixed link licences in locations that would be incompatible with mobile deployment in those areas; elsewhere we will keep the Upper 6 GHz band open to new fixed links.
- To remove access to 7110–7125 MHz for most Programme Making and Special Events (PMSE) use.
- To proceed with our proposal to protect the Radio Astronomy Service (RAS) use in the 6650–6675.2 MHz part of the Upper 6 GHz band, at each of the radio astronomy sites currently active in the band (there are 6 today).

1.4 We acknowledge the mobile industry requests for more extensive high-density areas but also recognise the significant uncertainty in mobile demand for this spectrum outside of the HD areas we have defined. Our view is that it is appropriate and proportionate to wait for further evidence – such as the extent of Wi-Fi use, availability of Upper 6 GHz band in mobile handsets, and updated mobile traffic, congestion and deployment forecasts.

1.5 We plan to progress authorisation for mobile as follows:

- Deployment across all high-density areas should be possible from **February 2032**, once clearance of relevant fixed links has completed.
- In high density areas where deployment does not depend on clearance, we expect deployments to be possible following our award (which we intend to take place in 2029 / 2030). Initial deployments will not be before **1 January 2030**, but could be later depending on the timetable for an award.
- Outside high-density areas, we do not expect to authorise any high-power mobile rollout to start before **1 January 2035**. We will consult on the details in the future.

1.6 We do not expect that this approach will constrain mobile deployments significantly. Mobile network deployments have generally started in the areas with highest traffic density, which correspond to the 6 GHz high density areas. For this reason, we consider that, should there be a delay to mobile deployments from setting a 2035 date for any additional high power mobile access, the impact is likely to be relatively low.

1.7 The timeline above provides additional certainty for both mobile and Wi-Fi deployment. In particular, it will allow Wi-Fi deployments outside of HD areas now with an extended time horizon. We consider that this overall approach will help both services cope with the increase in traffic volumes via efficient sharing of the band. More generally, spectrum sharing is likely to result in the optimal use of spectrum when compared with single use-case or user allocations.

Next steps

1.8 We will follow the statutory process for licence revocations of the fixed links listed in Section 4:

a) Ofcom will issue all affected licensees a notice of proposed revocation, outlining the affected point-to-point fixed link licences and the five-year notice period licensees will be given before licences are revoked, as well as inviting licensees to make representations on the proposed revocation(s) by a date which will be specified in the notice. We plan to send these notices shortly.
b) Licensees will have at least one month to submit representations to Ofcom regarding the proposed revocation. In this case specifically, we expect to ask for licensees' representations by early January 2027 (the exact date will be confirmed in the notice).
c) After the window for representations has closed, Ofcom will issue its final decision in respect of the proposed revocation within 30 days, having taken into account any representations provided by licensees. Where Ofcom decides to revoke the licence(s), final revocation notices will be issued to licensees, and the five-year revocation notice period will begin.

1.9 Separately, we have announced that we are making available to PMSE a further 50 MHz of spectrum shared with the Ministry of Defence in 7250–7300. This additional spectrum can be used in a similar way to other 7 GHz spectrum including 7110–7125 MHz.

The overview section in this document is a simplified high-level summary only. The decisions we have taken and our reasoning are set out in the full document.

2. Background

2.1 The Upper 6 GHz band is expected to be used by the UK's mobile network operators (MNOs) to increase the capacity of their networks. Mobile deployments in this band would most likely be concentrated in urban, high-density areas and used on a subset of existing macro sites with the highest traffic demand (around 82% of traffic is generated in urban and suburban areas).[1] Deployments in rural areas would likely be much sparser. The band also has potential to support the rollout of 6G networks in the UK from around 2030 prior to refarming other bands.

2.2 The Wi-Fi sector is also seeking access to spectrum in the Upper 6 GHz band to support increasing traffic and new applications. The growing use of Wi Fi supports a range of connectivity requirements, including enterprise networks; coverage of large venues; complementing the expansion of fibre-to-the-home; and enabling innovative use cases such as Augmented Reality (AR) glasses.

2.3 We confirmed in our January 2026 Statement and Consultation that we will use a sub-national licensing approach for mobile services within the mobile priority portion of the band (6585–7125 MHz). Details of a future award for mobile licences will be consulted on in a future document.

2.4 Figure 2.1 below provides an overview of present and future use of the entire 6 GHz band, for Wi-Fi and mobile. The **green bar** shows access allowed for Wi-Fi devices in general (whether or not controlled by AFC); the **orange bar** shows enhanced conditions available only for devices controlled by AFC.

Figure 2.1: Our previous decisions

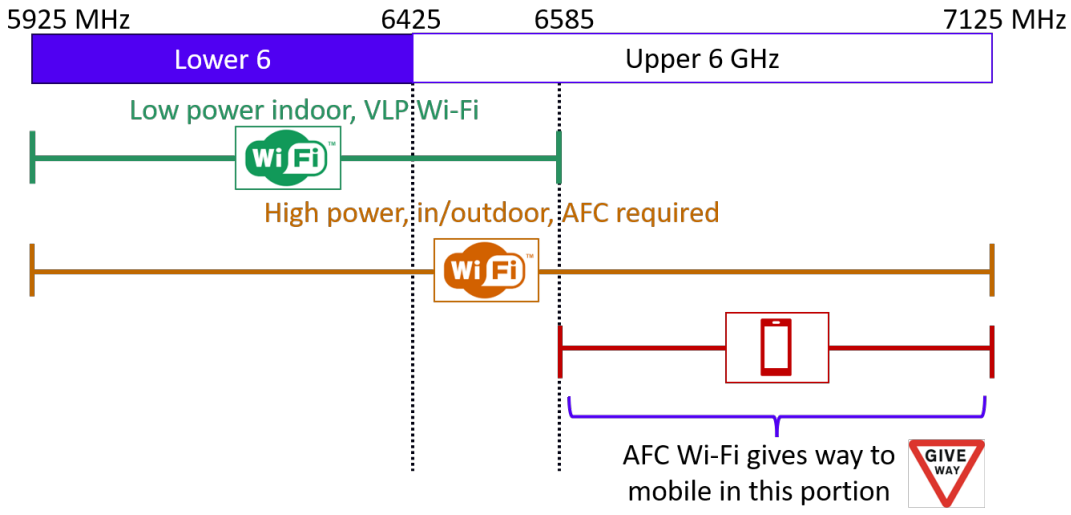

Source: Ofcom

2.5 Within the 'mobile priority' 540 MHz section of the band, Wi-Fi will be allowed to access the band, but only under the control of an AFC system, as indicated by the **red bar**. AFC will

[1] Ofcom, Connected Nations UK Report 2025, p. 45.

ensure that Wi-Fi can give way to mobile in the locations and channels where mobile is deployed as necessary.

Current users of the band

2.6 The 6 GHz band is currently used by a range of different services, as shown in Figure 2.2 below.

Figure 2.2: 6 GHz band plan

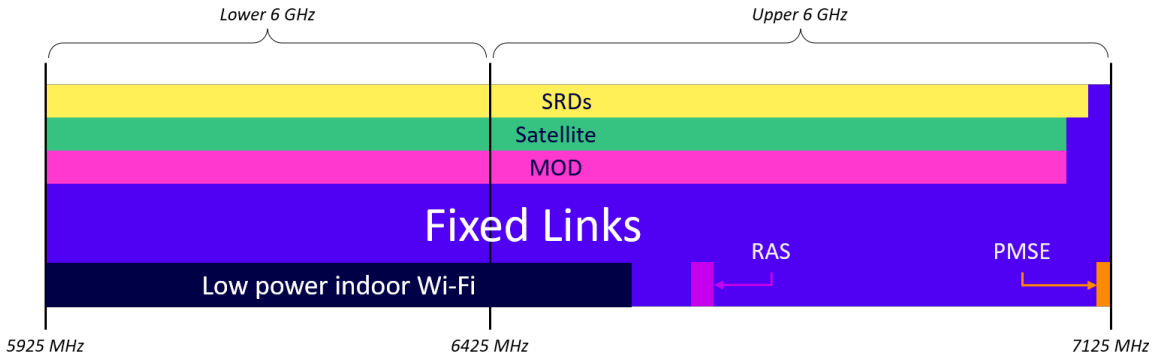

Source: Ofcom

- **Fixed links**: There are currently around 500 fixed point-to-point links in Upper 6 GHz band, used by around 30 licensees covering the telecoms, financial services, oil and gas, utilities, and transport sectors, as well as public sector services.
- **Programme Making and Special Events (PMSE)**: The 7110–7125 MHz part of the Upper 6 GHz band overlaps with PMSE use in the 7 GHz band. This spectrum is used mainly for wireless cameras and video links. Some events have exceptional demand for spectrum (e.g., the Formula 1 British Grand Prix at Silverstone), whereby additional spectrum is "borrowed" from other parts of the Upper 6 GHz band.
- **Radio Astronomy Service (RAS)**: Radio astronomers use 6650.0–6675.2 MHz for methanol spectral line observations conducted using the e-MERLIN (enhanced Multi-Element Radio Linked Interferometer Network) radio telescope array, which consists of radio astronomy antenna dishes located at six radio astronomy observatories (Cambridge, Darnhall, Defford, Jodrell Bank, Knockin and Pickmere).
- **Earth Exploration Satellite Service (EESS)**: The 6 GHz band is used mainly for sea surface temperature (SST) measurements which are important for weather and climate change prediction models.
- **Ministry of Defence (MOD)**: The MOD uses spectrum across the 6 GHz band, but generally at select, isolated locations.

European context

2.7 The European Commission (EC) is expected to harmonise technical conditions for both mobile use and Wi-Fi use of the Upper 6 GHz band, including spectrum sharing mechanisms, with the aim of creating an ecosystem of devices across the EU. The European Conference of Postal and Telecommunications Administrations (CEPT) will also introduce voluntary harmonisation measures that will supplement the EC measures for elements

where EU Member States need the option for national decisions on whether or how to permit additional uses, but still within a harmonised framework.

2.8 CEPT, through Project Team 1 of the Electronic Communications Committee (ECC PT1) and Project Team 61 of the Working Group on Frequency Management (FM61), is conducting the studies and drafting the reports that will form the technical basis for the harmonisation measures, and the UK has been active in driving much of this technical work.

2.9 For the UK, the outcome of this European work is highly relevant. Consumer equipment such as mobile phones, laptops and tablets, as well as Wi-Fi access points, will be designed based on harmonised technical conditions. It is therefore in our interest that these conditions are also suitable for devices to operate effectively within our frequency arrangements.

2.10 We noted previously the three CEPT Reports that would be produced in response to the mandate from the EC on the potential shared use of the Upper 6 GHz band by mobile and Wi-Fi.

- We reported in the July 2026 Statement that **Report A** on mobile and Wi-Fi coexistence with existing uses in the Upper 6 GHz band (Task 1 in the EC mandate) was published at the end of June as CEPT Report 92.
- **Report B** on the technical feasibility of shared use of mobile and Wi-Fi in the Upper 6 GHz band (Task 2 in the EC mandate) was published at the end of October as CEPT Report 94.
- ECC PT1 is currently working on **Report C** which will provide harmonised technical conditions for mobile use of 6585–7125 MHz (Task 3 of the EC mandate). The CEPT public consultation on Report C is scheduled from early March 2027. Following a review of comments in ECC PT1, the report should then be published at the end of June 2027.

2.11 Alongside the work in ECC PT1 on the EC mandate, FM61 is developing an ECC Recommendation on technical conditions for non-prioritised low power indoor Wi-Fi use in 6585–7125 MHz. This is based on the use of AFC databases, cross-technology signalling or individual licences to manage the coexistence with mobile networks. The work plan for this ECC Recommendation envisages publication in July 2028. FM61 is also preparing an ECC Report on technical conditions for Wi-Fi use of 6425–6585 MHz, which is expected to be published in March 2028.

Structure of this document

2.12 In the rest of this document:

- Section 3 outlines our decision on the definition of high-density areas in Upper 6 GHz.
- Section 4 outlines our decisions on our policy regarding fixed links in Upper 6 GHz.
- Section 5 outlines our decisions regarding other incumbent users in Upper 6 GHz, including our analysis of coexistence between mobile and existing users.
- Annex A1 outlines our legal framework.
- Annex A2 contains our impact assessments.
- Annex A3 sets out our cost modelling.

3. High density areas

3.1 In our April 2026 consultation we proposed a set of 88 areas ("6 GHz high density areas") for two purposes:

i) as the areas which would form the basis of a future award for mobile use; and
ii) as a basis to inform our decisions about which fixed links would be subject of proposed revocation.

3.2 We selected these areas based on our previous work that defined HD areas for the mmWave award; and additional information about the location of deployment of 3 GHz base stations. Overall, the 88 areas are those where we expect the greatest demand for additional mobile capacity that Upper 6 GHz could provide, based on the following **combined** evidence:

a) **Population**: we identified towns and cities in the UK with a population of 75,000 or greater (as part of the original work in advance of the mmWave spectrum award).
b) **Mobile traffic data and base station density**: The mmWave work also examined where in the UK had the highest mobile data demand at the "peak hour" for each base station in an area, as well as which areas had the highest density of mobile base stations.
c) **Location of mobile base stations using the 3 GHz band**: We compared the mmWave HD areas with the footprint of 3.4–3.8 GHz ("3 GHz") base stations. We added additional areas so that the proposed 6 GHz high density areas cover 77% of existing 3 GHz base stations, up from 73% in the mmWave HD areas.

Stakeholder responses

3.3 Out of 22 respondents to the consultation, 19 discussed or referred to HD areas. The following is a summary of the responses to our above proposals, broken down by theme:

High density areas should be larger

3.4 The three MNOs, Ericsson, the GSMA and Huawei were of the view that the proposed 88 high density areas were too small and constrained. They said the proposed areas relied too heavily on existing deployment data and traffic patterns, and did not sufficiently account for current and future 3 GHz deployment and plans. All three MNOs submitted data or maps showing that they had future 3 GHz mobile sites planned outside the proposed high density areas, and strongly suggested that they expected 6 GHz rollout to follow this pattern in the future. BT said the proposed HD areas were the right ones, but should be expanded to better reflect existing and planned 3 GHz deployments.

3.5 VodafoneThree said that deployment of Upper 6 GHz will be driven not only by capacity needs but also by considerations around deploying 6G technology. BT, Ericsson, the GSMA, Virgin Media O2 (VMO2) and VodafoneThree said that 6 GHz will be the pioneer band for 6G services and/or particularly important for 6G. On the other hand, the Wireless Broadband Alliance (WBA) said that Wi-Fi 7 will be essential for the success of 6G, by enabling offload to indoor Wi-Fi.

3.6 Ericsson, Huawei and VodafoneThree also said major transport corridors should be included, as they expect future mobile demand to emerge in those locations. The GSMA, VMO2 and VodafoneThree expressed a preference for national licensing, as with the 3 GHz

award; while they acknowledged the need to protect fixed links, they said this need not preclude a broader high density area definition. VodafoneThree also suggested additional specific extensions to the proposed HD areas including joining up some of the proposed HD areas and enlargement of others.[2]

3.7 VodafoneThree said national or quasi-national licencing would not impede Wi-Fi usage in any way, because users would still have opportunistic access via automated frequency coordination ("AFC"). They also said that increasing the size of HD areas while protecting incumbents would avoid the need for Ofcom to process around four thousand individual licence requests for their proposed high configuration sites outside the HD areas. VodafoneThree said that the 'administrative overhead of these applications will also be an economic barrier to network rollout – a breach of Ofcom's growth duty.' Similarly, BT indicated that we should consider expanding the high density areas where this will not further impact the fixed links that are proposed to be retained, and that doing so would reduce the use of more burdensome local licensing for mobile deployments outside the high density areas.

Ofcom should avoid high density areas that are too large

3.8 Wi-Fi proponents[3] generally supported the proposed high density areas, viewing sub-national licensing as proportionate because demand for Upper 6 GHz mobile services is expected to be concentrated mainly in densely populated urban areas rather than nationwide. The Dynamic Spectrum Alliance (DSA) and the WBA considered that unused mobile-priority spectrum should remain available for alternative uses, such as early Wi-Fi access potentially through AFC or other sharing mechanisms. Apple, Cisco and the Wi-Fi Alliance expressed the view that the HD areas should align with where mobile is likely to deploy in response to demand.

3.9 Apple, the DSA and the Wi-Fi Alliance also recommended that we should review the boundaries regularly to ensure that the HD areas continue to reflect real-world demand for mobile services, to avoid constraining other potential uses of the band. Cisco stated that if the spectrum is not licensed at auction or the mobile deployment does not materialise in a specific zone within a reasonable timeframe (e.g., 24–36 months) after Ofcom makes the spectrum available, there then should be a clear pathway to relax the AFC-only requirement for Wi-Fi.

3.10 [✂] stated that there were cases where the high density area definition extended beyond the genuinely high density, concentrated population area and into surrounding lower density or rural land.

Decision on HD areas depends on approach outside them too

3.11 BT, the GSMA, Huawei, VMO2 and VodafoneThree made it clear they would have liked more information about how mobile will be authorised and prioritised outside HD areas, in order to inform their response to the extent of HD areas. VMO2 stated that mobile access outside of high density areas should avoid a manual authorisation process. Similarly, and as

[2] In addition to extension along principal motorways and railways lines, VodafoneThree requested extensions or combinations in areas such as London, the Solent, South Wales, the West Midlands, Nottingham, Derby, the Northeast of England and Scotland.

[3] Apple, Cambium Networks, Cisco, DSA, HPE, Wi-Fi Alliance and Wireless Broadband Alliance.

noted above, VodafoneThree said the administrative overhead for the applications outside HD areas would be an economic barrier to network rollout.

3.12 VMO2 also noted that the current absence of detailed proposals for a licensing mechanism outside of high density areas, including level of prioritisation that mobile access will be given, process, duration and associated costs make it difficult to assess the overall framework in the round.

Other points

3.13 VMO2 also said that Ofcom should undertake further analysis of adverse impacts on communities outside of HD areas, to ensure they did not miss out on the benefits of mobile deployment using Upper 6 GHz as a result of the current proposals. Similarly, Cisco suggested we should monitor whether the high density areas definition creates any unintended "digital deserts", to ensure that citizens outside the high density areas are not left behind as the UK's digital infrastructure evolves.

3.14 BT also expressed a concern about the possibility of interference between Wi-Fi deployments near HD areas and mobile users connecting to base stations inside HD areas. They requested that we:

a) Confirm that MNOs will be able to deploy base stations anywhere within the 6 GHz HD areas.[4]
b) Create a "buffer zone" around those areas, to avoid interference as above.

Our analysis and decision

3.15 Having carefully considered stakeholder feedback, we have decided to confirm the high density areas proposed in our April 2026 Consultation. The reasoning for our decision is set out below.

3.16 Having taken into account stakeholder responses, we conclude the 6 GHz high density areas as proposed in April 2026 are a robust estimate of where mobile operators are **most likely** to need the additional capacity provided by Upper 6 GHz. This is because:

a) Our analysis is based on the key drivers for network congestion, namely peak data traffic and population density. Spectrum utilisation and traffic is highest in the areas our analysis identified from those drivers. We also took into account for deployments using similar frequencies (3 GHz).
b) Mobile operators responded they may deploy beyond these areas, but there was no suggestion that we incorrectly estimated the areas with the greatest need for the new spectrum. On the contrary, BT said these were the right HD areas, although they saw a need for expansion.
c) There is general consensus in the mobile industry that dense urban areas are in much greater need of spectrum for capacity. For example, the GSMA estimates dense urban area spectrum needs to be 650 times greater than those of rural areas in the next decade, in its Vision 2040 report.

3.17 In response to stakeholder comments that these high density areas do not sufficiently take into account existing and future 3 GHz deployment patterns, we do not consider that any

[4] BT noted that this would be a different approach to that in mmWave where there were restrictions on distance/power limits near the boundaries of high density areas.

future mobile rollout outside of these areas will necessarily follow the same pattern as 3 GHz. While the most congested sites will likely require both 3 GHz and 6 GHz, there are likely to be many sites where 3 GHz will be sufficient. As we explain later in this section, we will consider further evidence of the need for mobile deployment outside the high density areas and, if neccessary, will consult on possible solutions.

3.18 We also do not consider that the current definition of high density areas will hamper 6G rollout. We note that the specifications of 6G have not yet been finalised and we have not seen any evidence that any of the likely features of 6G are specific to 6 GHz. Furthermore, as 6 GHz and 3 GHz have similar technical characteristics, we would expect that 6G deployments using refarmed 3 GHz or other bands should be possible.

3.19 With regards to stakeholder comments about expansion of these high density areas, including up to a national licence, we note that we have already made a decision to adopt sub-national licensing as we expect that this spectrum will be used for mobile in the most congested areas only, at least in the medium term. Furthermore, it is not clear to us that traffic in some of the specific locations that have been suggested will increase to the point where the full portfolio of spectrum, including 6 GHz, would need to be deployed. For example, it is not clear that rail and road corridors will require the full deployment of spectrum nor that 6 GHz is the spectrum best suited to provide capacity in these locations. For these reasons, we also disagree with the comment that some areas will be disadvantaged as a result of not being included within the high density areas at this stage.

3.20 Some respondents suggested that we should consider future reduction of these high density areas depending on how mobile has deployed, to avoid missed opportunities for Wi-Fi use. Our AFC framework should allow for Wi-Fi to make use of the spectrum, even inside of high density areas, when and where mobile has not deployed by using AFC.

3.21 With regards to comments that our definition goes beyond genuinely high density areas, we note that our analysis is based on key drivers for congestion. We acknowledge that at the boundaries we have approximated as rectangles,[5] but we consider that this is a proportionate approach to have a reasonable definition of HD areas. As outlined in Section 4, we have assessed the impact of clearance of specific links that fall within these high density areas as a function of impact on mobile deployment.

3.22 Finally, with regards to limitations for mobile deployment inside of high density areas, our expectation is that, with the exception of the links that we have decided to maintain, MNOs should be able to freely deploy within the HD areas. We note BT's request for a buffer zone to protect mobile deployments from Wi-Fi. We will consider this issue when we update the AFC framework in the future to ensure Wi-Fi clears space where and when mobile deploys.

3.23 In conclusion, our decision is to confirm the proposed 88 high density areas because:

- they reflect the locations where we are most likely to see future mobile deployment;
- beyond these areas, we currently lack strong evidence of need for additional mobile spectrum (see sub-section below).

[5] We adopted rectangles as shape for high density area for simplification reasons, following responses from MNOs. See our March 2023 Statement and Further Consultation on mmWave spectrum, paragraphs 4.14 to 4.18.

- We also took into account the benefits of other uses and future users such as fixed links and Wi-Fi, which would be impacted if we extended those areas now.

3.24 We consider that this decision is proportionate and provides a net benefit to consumers and citizens in the UK.

3.25 The high density areas are shown in Figure 3.1 below, and the shapefiles for these areas are available to download on the Ofcom website.

Mobile deployment beyond the high density areas

3.26 We acknowledge that all three mobile operators have stated in their responses they are interested in deploying beyond the HD areas, whether that be for additional capacity needs or for technology considerations such as launching 6G.

3.27 We expect that any need for deployment outside of the defined 6 GHz high density areas would only arise later in MNOs' deployment plans, as they will likely focus their initial deployments in the most congested areas, gradually expanding outwards as traffic continues to grow. Therefore, it is unlikely that MNOs will need to deploy outside of the defined high density areas until much later.

3.28 Given the significant uncertainty with regards to the demand for spectrum from mobile or other technologies outside of these high density areas, we will wait for further evidence before consulting on how to enable high power mobile outside of the HD areas confirmed in this statement.

3.29 We expect to consult in due course on the possible solution to enable such deployments. This may include a combination of solutions such as a modest expansion of the high density areas (without requiring the clearance of additional fixed links), a local licensing regime or database solutions. We do not expect any future decision on mobile deployment outside of these high density areas to be implemented before 2035. This will allow time to gather further evidence on the extent of Wi-Fi deployments and planned mobile deployments, equipment ecosystems, and demand from other uses. It also provides additional investment certainty for Wi-Fi users who may want to start using the spectrum under the current rules.

3.30 In response to comments regarding the possible administrative overhead of a local licensing regime, when we propose a solution for mobile deployment outside of these areas we will take these issues into consideration. We will also consider at that stage the impacts on local communities of any mobile licensing regime outside of HD areas, taking into account the comments received on this issue.

3.31 Finally, with regards to comments that it is not possible to consider the current high density areas without having a clear picture of how mobile deployment outside of these areas will be enabled, as discussed before, there is significant uncertainty on the need for mobile use of the Upper 6 GHz band outside of these areas, which is why we do not consider that it is appropriate to set out firm proposals at this stage.

Figure 3.1: Map showing the 6 GHz high density areas

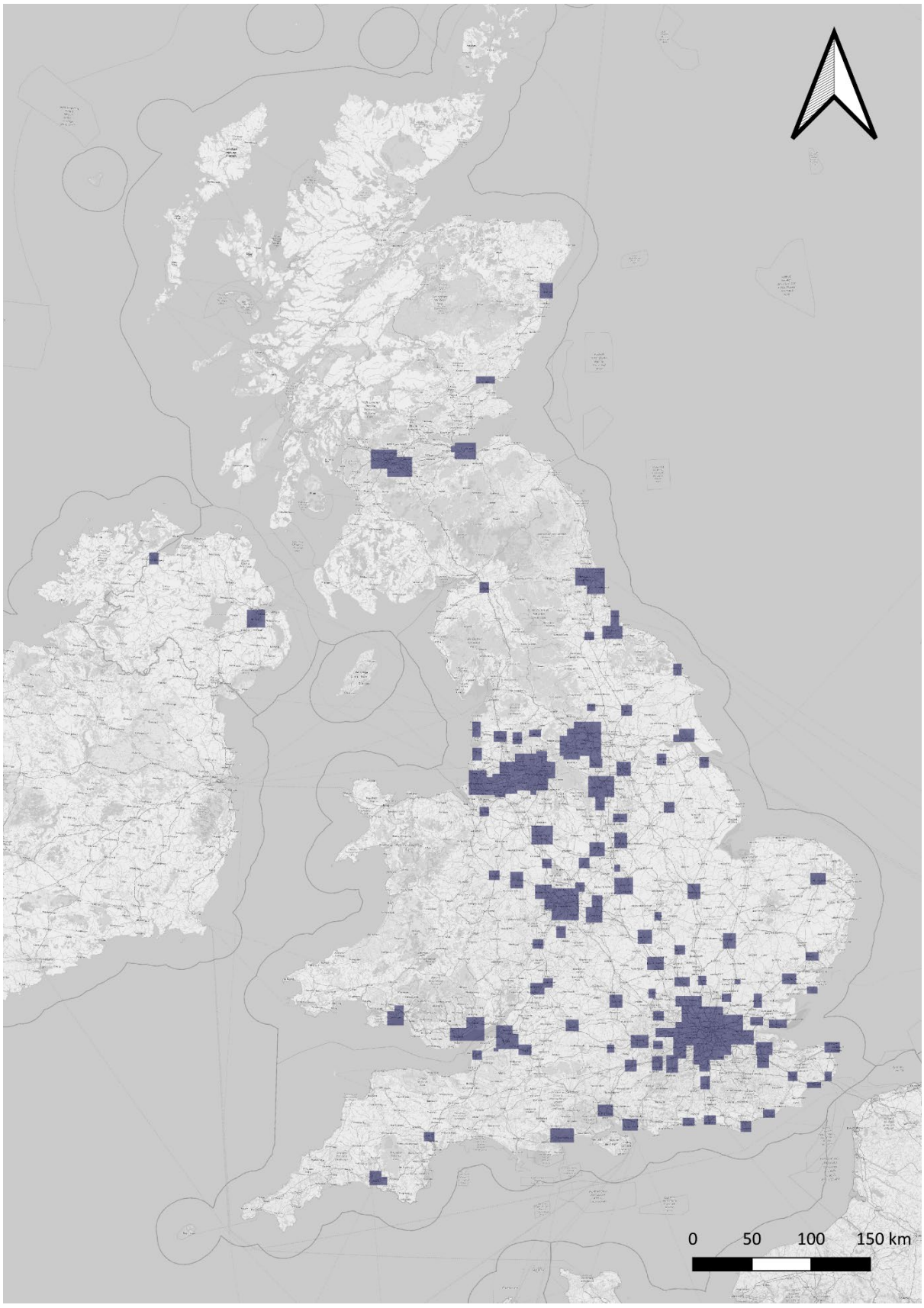

Source: Ofcom; base map © OpenStreetMap contributors

4. Fixed links

4.1 In this section, we set out our decisions on managing coexistence between fixed links in the Upper 6 GHz band and future mobile use in the high-density areas as outlined in Section 3. This includes both existing links, some of which we have decided will be subject to the statutory revocation process, and future links, which will still be accepted in the band outside of high-density areas and subject to coordination.

4.2 We then outline our decision on the approach we have used to identify the links subject to revocation.

4.3 Finally, we outline the next steps for the statutory revocation process for those licensees affected by this.

Our proposed approach for managing coexistence between mobile and fixed links in the Upper 6 GHz band

Managing existing fixed links

4.4 In our April 2026 consultation, we explained that fixed link receivers can experience harmful interference from mobile base stations operating on the same frequencies, particularly where a mobile base station is in the main beam of the fixed link antenna. Our analysis of the fixed links in the Upper 6 GHz band showed that this interference can occur even when the fixed link receiver and mobile base station are tens of kilometres apart. The separation required to avoid interference will depend on factors including mobile transmit power levels, antenna heights and local clutter.

4.5 Given our plans to introduce mobile use in the Upper 6 GHz band, we considered how existing fixed links should be managed. At the time of our April 2026 consultation there were 517 links in the Upper 6 GHz band; this has since fallen to 481.

4.6 Our preferred approach was to clear links in and around the proposed high-density areas. This would make spectrum available for new mobile use where we expect this spectrum will be needed the most, while allowing fixed links to remain elsewhere and continue providing valuable services, particularly in less densely populated areas of the UK.

Future access to the band for fixed links

4.7 We also considered how to manage applications for future fixed links in the band. Consistent with our proposed approach to clear existing links in and around the high-density areas, we proposed not to accept applications for new fixed links in the high-density areas. We would continue to consider applications outside those areas, subject to a coordination check to ensure that the proposed link would not receive harmful interference from mobile use within the high-density areas.

4.8 We considered that this approach would facilitate mobile deployment where demand is expected to be greatest, while allowing continued future use of the band by fixed links elsewhere.

Stakeholder feedback

Fixed link licensees

4.9 Of the 22 responses we received to the April 2026 consultation, 19 discussed fixed links. Most respondents broadly agreed with our proposals, however some users raised concerns in relation to their use of existing fixed links. The BBC, the DSA, Energy Connect,[6] the Port of London Authority (PLA) and Tampnet, as well as [✂], expressed concerns either about the impact on their own links or about the overall approach Ofcom proposed to take.

4.10 Several incumbent users said that their links support critical services. This was particularly relevant to utilities, including Energy Connect [✂]. [✂] These licensees highlighted the importance of the services their links support and the potential knock-on effects that revocation could have on the practical delivery of those services.

4.11 Some existing licensees, including [✂], highlighted that some of their Upper 6 GHz links had previously been moved into the band following the clearance of the 1.4 GHz band. They noted the declining availability of spectrum for fixed links in lower frequency bands, saying that this could make it difficult to migrate existing links out of the Upper 6 GHz band. Stakeholders also noted the cost that would be incurred to replace these links, and some expressed the view that the cost model did not fully account for the operational importance of fixed links, particularly those supporting critical national infrastructure functions, and the potential cost of losing access to these functions if it were not possible to migrate the link to an alternative band or service.

4.12 Tampnet [✂] stated that they did not think the cost model considered the difference in costs between offshore and terrestrial links. Tampnet emphasised the practical difficulties of making alterations to offshore fixed link stations, for example with weather conditions limiting maintenance windows and increasing costs. Tampnet also said that subsea fibre is materially different from terrestrial fibre as a potential replacement for fixed links, as it is both more expensive and more difficult to plan. As a result, replacing offshore fixed links may require longer lead times and, in some locations, may not be feasible.

4.13 The PLA [✂] also commented on the difficulty of operating links over water, including where one or both link ends are on land. They cited technical issues such as reflections and multi-path fade. The PLA stated that, where coexistence can be achieved, it is more efficient to leave links in place and expressed concern that higher frequency bands would not be suitable, given the need for its current links to account for ship movements and tidal changes. [✂]

4.14 Energy Connect [✂] were supportive of the proposal for future links to continue to have access to the band outside of high density areas and subject to coordination.

Other stakeholders

4.15 Supporters of Wi-Fi use of the band (Apple, Cambium Networks, Cisco, HPE, the Wi-Fi Alliance and the Wireless Broadband Alliance) generally approved of Ofcom's overall proposed approach to clearing fixed links where necessary to enable mobile deployment. They agreed with a targeted clearance process in high density areas, provided it included

[6] Formerly known as the Joint Radio Company (JRC), which is the name associated with the response it submitted to our April consultation.

adequate transition arrangements, careful management of migration, and notice periods. These respondents considered nationwide clearance disproportionate but viewed localised clearance as necessary in areas where extensive future mobile demand is expected. They also supported leaving the band open to new fixed links in areas that do not need to be cleared. However, the DSA advised against any pre-emptive clearance of fixed links on the basis of uncertain future demand, and supported AFC-based dynamic coordination approaches instead.

4.16 BT and the GSMA said that fixed links continue to play an important role in connecting rural areas. BT noted that demand for mobile and Wi-Fi will be low in these locations, and that fixed links may be providing services for which alternatives such as fibre are economically and technically unviable, meaning that retaining fixed links in these areas is a more efficient use of spectrum than clearing them. VMO2 also recognised the importance of existing fixed link users and the services they support and agreed that it would be possible to preserve some fixed link use in rural areas. VodafoneThree also accepted that some fixed links would be difficult to replace or remove and that it would be disproportionate to clear all incumbent usage of the band where there is no impact on mobile services.

4.17 BT, Ericsson and the GSMA supported keeping the band open for new fixed link applications outside of high-density areas, while VodafoneThree supported this provided that any future links do not interfere with mobile deployment, including in locations where additional mobile authorisation may be required outside high-density areas. VMO2 said that some incumbent fixed links in rural areas could be preserved even if the high-density areas were significantly expanded. BT and Ericsson also emphasised the importance of identifying suitable alternative spectrum for any fixed links that need to migrate, with Ericsson suggesting that alternative bands should provide long-term regulatory certainty to minimise the risk of further relocations.

4.18 Huawei suggested that Ofcom should not restrict the size of the high density areas in order to avoid clearing too many fixed links, and that fixed links should only remain in the band where they are critical in nature.

Ofcom's decision

We will proceed with the clearance of links in and around high density areas

4.19 Having carefully considered stakeholder feedback, we have decided to proceed with our proposed approach of a targeted clearance of fixed links in and around high-density areas, subject to a number of small changes which are set out below, along with the reason for our decisions.

4.20 Our view is that, on balance, revoking links that impact mobile operators' ability to deploy freely in the 6 GHz high-density areas is proportionate and likely to provide a net benefit to the UK. As we outlined in our April 2026 consultation, making spectrum available for extensive mobile deployment in high-density areas would bring significant benefits for consumers and citizens, as it would make large blocks of spectrum available for unencumbered mobile use in these areas, where we anticipate the most extensive mobile deployments. Allowing larger channels for mobile deployments will help to enable applications that require larger bandwidths, and leaving fixed links in place in high-density areas could jeopardise this.

4.21 We expect that most of the links we have decided to clear will need to migrate to other alternatives. While we expect that such migration will preserve the underlying services, there will be a cost to this migration. As set out in Annex A3, we estimate the costs of migrating the affected fixed links of around £14.25m in the baseline scenario, which we consider to be a representative basis for assessing the aggregate costs of our proposal. We consider that these costs are proportionate compared to the benefits of mobile use in high density areas.[7]

4.22 The potential benefits of any further fixed link clearance beyond high density areas are more uncertain. This is because peak data traffic outside high-density areas is significantly lower than in the high-density areas. In areas with lower traffic demand, the need for additional capacity from the entirety of the Upper 6 GHz band is reduced, and we consider the likelihood of any extensive mobile deployment is lower.

4.23 In response to the feedback stakeholders provided to our consultation, we have decided to make a number of small changes to the approach we have used to identify the links subject to clearance, from both a policy and implementation standpoint. These changes are explained in more detail below and have resulted in a smaller number of links that are in scope for proposed revocation compared to the list of 206 links set out in our April consultation. The number of links present in the band has also decreased since our consultation. We are therefore now proposing to revoke a total of **156** links from the band, and these links are listed at the end of this section.

4.24 We will shortly begin the statutory process for the revocation of the affected links, during which time licensees will be able to make representations to Ofcom on the proposed revocation. Any such representations will be taken into account when we make the final decision in respect of each proposed revocation. The process is set out in full at the end of this section.

We will continue to accept new fixed link applications outside high density areas, subject to coordination

4.25 Having decided to proceed with the revocation of existing fixed links in and around the high-density areas, we have also decided not to accept applications for new fixed links where either base station, or any part of the link path, falls within a high-density area. Allowing new links in these areas would be inconsistent with our decision to clear existing links and could constrain future mobile deployment.

4.26 We will continue to accept applications for new fixed links outside the high-density areas, subject to the existing assignment process. As part of that process, proposed links will also be coordinated against the high-density areas to ensure that they would not receive harmful interference from mobile use in these areas.

4.27 We consider that this approach promotes efficient use of spectrum while retaining flexibility for new fixed links in parts of the country where we expect demand for 6 GHz mobile deployment to be lower and more localised. This may be particularly valuable in

[7] As is discussed further in Annex A3, the baseline scenario estimates the total incremental cost of revoking the licences of onshore fixed links, which represent 147 of the 156 fixed link licences we propose to revoke. We discuss our view on the clearance of offshore links in paragraph A2.22 to A.2.23.

rural or remote areas, where fixed links can provide connectivity in locations where alternatives such as fibre may be technically or economically unviable.

4.28 We said in Section 3 that we intend to consider at a later date possible deployment of mobile beyond the 88 high density areas. We do not intend to propose the revocation of further fixed links from the Upper 6 GHz band as a result. We consider this appropriate because the clearance we are confirming today will make spectrum available for mobile deployment in the areas where we currently expect demand to be greatest. It will also provide greater certainty for existing and prospective fixed link users, while giving future mobile users a clearer basis on which to plan deployments that protect existing fixed links.

Our proposed approach for identifying fixed links subject to clearance

4.29 We outlined in our April consultation the approach we had taken to identify the fixed links which we considered could be impacted by interference from high-density areas. We did this by carrying out a coexistence analysis, using coverage predictions to find areas where a mobile base station deployed in a high-density area may impact an existing fixed link.

4.30 For mobile base stations, we assumed a 100 MHz channel with a maximum EIRP of 73 dBm, a peak antenna gain of 26.6 dBi,[8] an antenna height above ground of 18m, a mechanical downtilt of 10 degrees and beamforming towards the associated user equipment.

Stakeholder feedback

4.31 Cambium Networks, Cisco, HPE, VMO2 and the Wireless Broadband Alliance all agreed with the approach we had set out. Apple agreed with the overall approach but encouraged Ofcom to ensure we are using real-world deployment data and avoiding conservative assumptions. The DSA suggested a database-assisted approach to coordination would ensure real world conditions were being captured.

4.32 Some fixed link licensees, including Energy Connect and Tampnet, suggested our analysis was too conservative and had identified links that would not, in practice, be impacted by new mobile use in high density areas. Energy Connect, [✂] also considered that the proposed high density area definitions had contributed to this by including some outlying areas where mobile services are very unlikely to be deployed. Several respondents asked Ofcom to share the coexistence assessment for their links affected by potential revocation. They said this would help to justify the need for revocation and allow licensees to assess whether engineering mitigations may be possible. The PLA said that it seemed from the consultation that we had considered links outside of high-density areas on a case-by-case basis but not those which overlap the high density areas themselves, and queried why this was. [✂]

4.33 BT questioned why we were using a downtilt of 10 degrees for mobile base stations as this was lower than what it would assume, however, it accepted that given the likely use of active antenna systems (AAS) in this band in the future it was difficult to make blanket assumptions for mobile base station downtilt. BT also suggested that our assumption of 73 dBm / 100 MHz for mobile base station power might be too low. VodafoneThree asked

[8] Number of Antenna elements: 16H x 8V; gain per antenna element: 5.5 dBi.

about why we use 100 MHz channels for mobile when mobile industry is looking for 200 MHz channels for 6G.

Ofcom's decision

We have used more individual data in our analysis and removed the bottom 160 MHz of the Upper 6 GHz band

4.34 We note stakeholders' concerns that our modelling may be conservative. In carrying out our analysis, we considered whether more detailed information was available that could improve our assessment. In particular, for marginal cases, which we discuss below, we used actual macrocell antenna heights for existing mobile base station locations, rather than relying on the 18m assumed antenna height. This has given us better estimates of the impact zones around individual links. However, some assumptions remain necessary based on the information currently available to us about individual fixed links. We therefore recognise that, in some cases, operators may consider that our assumptions do not fully reflect the characteristics or real-world performance of their equipment.

4.35 We would encourage stakeholders who consider that our analysis does not fully reflect the characteristics of their fixed links to provide relevant information during the representations period that forms part of the revocation process (outlined at the end of this section). We will take such information into account as part of that process.

4.36 We acknowledge BT and VodafoneThree's comments on the assumptions used for mobile base station downtilt, transmit power and channel bandwidth. Our analysis was intended to identify fixed links that could potentially constrain future mobile deployment in high density areas, rather than to predict the precise characteristics of future 6 GHz deployments.

4.37 The 100 MHz channel bandwidth used in our analysis is a modelling assumption and is not intended to limit the bandwidth that may be deployed by future mobile networks. We considered that assessing interference based on a defined power level in a 100 MHz bandwidth provided an appropriate basis for identifying potentially affected links (which are of a narrower bandwidth). Wider mobile channels would not necessarily result in a corresponding increase in the interference received by a fixed link.

4.38 Following the publication of our April 2026 Consultation, we noted that we had included some links in our list where the only affected fixed link receiver would be in the lower 160 MHz of the Upper 6 GHz band. As we decided in our July 2026 Statement to split the band in such a way that the bottom 160 MHz will only be authorised for Wi-Fi use, we are allowing the links in this category to remain in the band. This retained 17 links.

We have allowed a small number of "marginal" links to remain in the band

4.39 In addition to this updated technical information, we have also taken on board feedback from stakeholders that suggested we consider in more detail to what extent specific links' impact zones do overlap with expected mobile use in high density areas.

4.40 Some stakeholders queried (either in consultation responses or in bilateral meetings) how some links very far from the proposed high-density areas, or which ran parallel to high density areas, could receive interference from those areas. In some cases, stakeholders

suggested that the only locations where a mobile base station could cause interference to a fixed link were areas of countryside or the tops of hills within the high-density area boundaries. They suggested that in these cases, mobile base stations in the Upper 6 GHz band were unlikely to deploy in these locations and as such leaving these fixed links in the band would not in practice constrain future mobile rollout.

4.41 Based on our coexistence analysis, we looked in more detail at the links which would receive an impact from mobile use in high density areas. In this process we identified:

- Any link where the impact zone of the link overlapped with a high-density area, but did not interact with any existing or planned 3 GHz mobile base station locations.[9] In these cases we consider that to leave the link in the band would not cause any material impact on mobile deployment in practice for new mobile use. This affected 5 links, all of which we are allowing to remain in the band.
- Links where there is an overlap with planned or existing 3 GHz base stations, but this would have a very small impact on mobile deployments. Specifically, in some cases this means that the number of existing or planned base stations affected was very low, and in others the resulting impact on a mobile base station to ensure the fixed link is protected would be very low (generally below 10 dB). In these cases, we exercised our judgement about whether these links ought to be revoked or not. 10 links were allowed to remain through this process.

4.42 In light of our slightly revised approach, there is likely to be a small number of fixed links remaining in the band which we will require future Upper 6 GHz licensees to protect. Currently this is only the 15 links we have allowed to remain in the band as outlined in the paragraph above; however, it is possible that there could be a few more once we have concluded our work on the statutory revocations process and considered representations from affected licensees. We will publish the details of any coordination notice required to give effect to this at a later date, as the details of the future award are developed. In practice, we do not expect that the need for protection of any of these remaining links will have a significant impact on mobile use of the band in any areas where mobile base stations are actually likely to be deployed.

Next steps

4.43 We will now move forward with the statutory revocation process for the affected fixed link licensees.

4.44 This process involves the following steps:

a) Ofcom will issue all affected licensees a notice of proposed revocation, outlining the affected point-to-point fixed link licences and the five-year notice period licensees will be given before licences are revoked, as well as inviting licensees to make representations on the proposed revocation(s) by a date which will be specified in the notice. We plan to send these notices shortly.
b) Licensees will have at least one month to submit representations to Ofcom regarding the proposed revocation. In this case specifically, we expect to ask for licensees' representations by early January 2027 (the exact date will be confirmed in the notice).

[9] For this, we used information collected as part of Ofcom's 2025 Connected Nations report, as well as information provided by the three MNOs outlining their planned 3 GHz base station deployment locations. This included real mobile base station heights, where this information was available.

c) After the window for representations has closed, Ofcom will issue its final decision in respect of the proposed revocation within 30 days, having taken into account any representations provided by licensees. Where Ofcom decides to revoke the licence(s), final revocation notices will be issued to licensees, and the five-year revocation notice period will begin.

4.45 We expect the final decisions on revocation to be issued to licensees around February 2027, and we plan to publish a short update text following this to confirm, at a high level, the results of the process. Individual licensees' decision letters and representations will not be published.

4.46 Users seeking to move existing Upper 6 GHz links to another band can find more information and the application form for new licences on the Ofcom website, and are welcome to contact Ofcom's licensing team at spectrum.licensing@ofcom.org.uk with any questions.

List of fixed links we will propose to revoke

4.47 On the basis of the decisions we have set out above, we have identified 156 links in total in the Upper 6 GHz band which we will propose to revoke, as set out in Table 4.1 below. Links whose details are confidential have been redacted. As set out above, all affected licensees will shortly be issued with a notice of proposed revocation, which is the first step in the revocation process.

4.48 These links are also displayed in the map in Figure 4.1 below.

Table 4.1: Upper 6 GHz fixed links subject to revocation, by licensee (non-confidential)

Aquila Air Traffic Management Services Limited			
1069184/3	1083129/2	1083131/2	1228405/1
1229022/1			
Arqiva Limited			
1200327/4	1200433/3	1200436/3	1200439/3
1217821/1	1217838/1	1218912/3	1329397/2
British Telecommunications Limited			
0433020/1	0433029/1	0433038/1	0433045/1
0433054/1	0433061/1	0433114/1	0433142/1
0475935/2	0475936/2	0475945/2	0475946/2
0484931/2	0484932/2	0484962/2	0484963/2
0490660/1	0490661/1	0490666/1	0490667/1
0492387/1	0492388/1	0812064/2	0815153/3
0859776/2	0861337/2	0861339/2	0913528/2
0913530/2	0938973/2	0940387/1	0940389/1
0940391/1			
Church Communities UK			
0878702/2	1281919/1		
County Broadband Ltd			
0956985/3	0957572/1		

DRW NX UK Ltd			
1064481/1	1064516/1	1064527/2	1106274/3
1129613/1	1129617/1	1206525/1	1246821/1
1250624/1	1262481/1	1262483/1	1277273/1
1331249/1	1331250/1		
Energy Connect Organisation Limited[10]			
1018369/1	1018370/1	1018371/1	1018372/1
1018543/1	1018544/1	1018545/1	1018550/1
1018551/1	1018570/1	1018576/1	1018614/1
1018615/1	1018630/1	1308353/1	1308875/1
1372774/1	1376382/2	1389454/1	1412023/1
Mckay Brothers International SA			
1077645/1	1112785/1	1112787/1	1187947/1
1187949/1	1223299/1	1223301/1	1248377/1
1248405/1	1253300/1	1253330/1	1266190/1
1266192/1	1266223/1	1266224/1	1328197/1
1339673/1			
MMX Communications Services Limited			
1308857/1			
New Line Networks LLC			
1030400/1	1041349/1	1041403/1	1041404/1
1041689/1	1041690/1	1057922/1	1115095/2
1121734/2	1126312/1	1126317/1	1170900/1
1170918/1	1277076/1		
Northern Ireland Electricity Networks Limited			
0920295/5	0920315/2		
Northern Ireland Water Limited			
0512705/2	0512706/5	1283091/1	
Port Of London Authority Limited			
1270568/1	1270576/1	1270599/2	1270607/1
1270624/1	1278737/1	1392823/1	
Scot-Tel Limited			
0838732/4			
Tampnet AS			
1280361/1	1280364/1	1280365/1	1385358/1
1386586/1			
Tampnet UK Limited			
1208662/3	1208991/2	1241440/1	1241446/1
Voneus Limited[11]			
1423961/1	1423965/1	1423967/1	

[10] At the time of our April 2026 consultation, Energy Connect Organisation Limited was named Joint Radio Company Limited.

[11] At the time of our April 2026 consultation, these links were held by Airband Community Internet Limited, under different licence numbers.

Wholesailor BV			
1252621/2	1252640/7	1252814/3	1252964/3
1256067/1	1263064/6		

Source: Ofcom

Table 4.2: Upper 6 GHz fixed links subject to revocation, by licensee (redacted for confidentiality)

[✂]

Figure 4.1: Map showing fixed links in the Upper 6 GHz band and 6 GHz high density areas

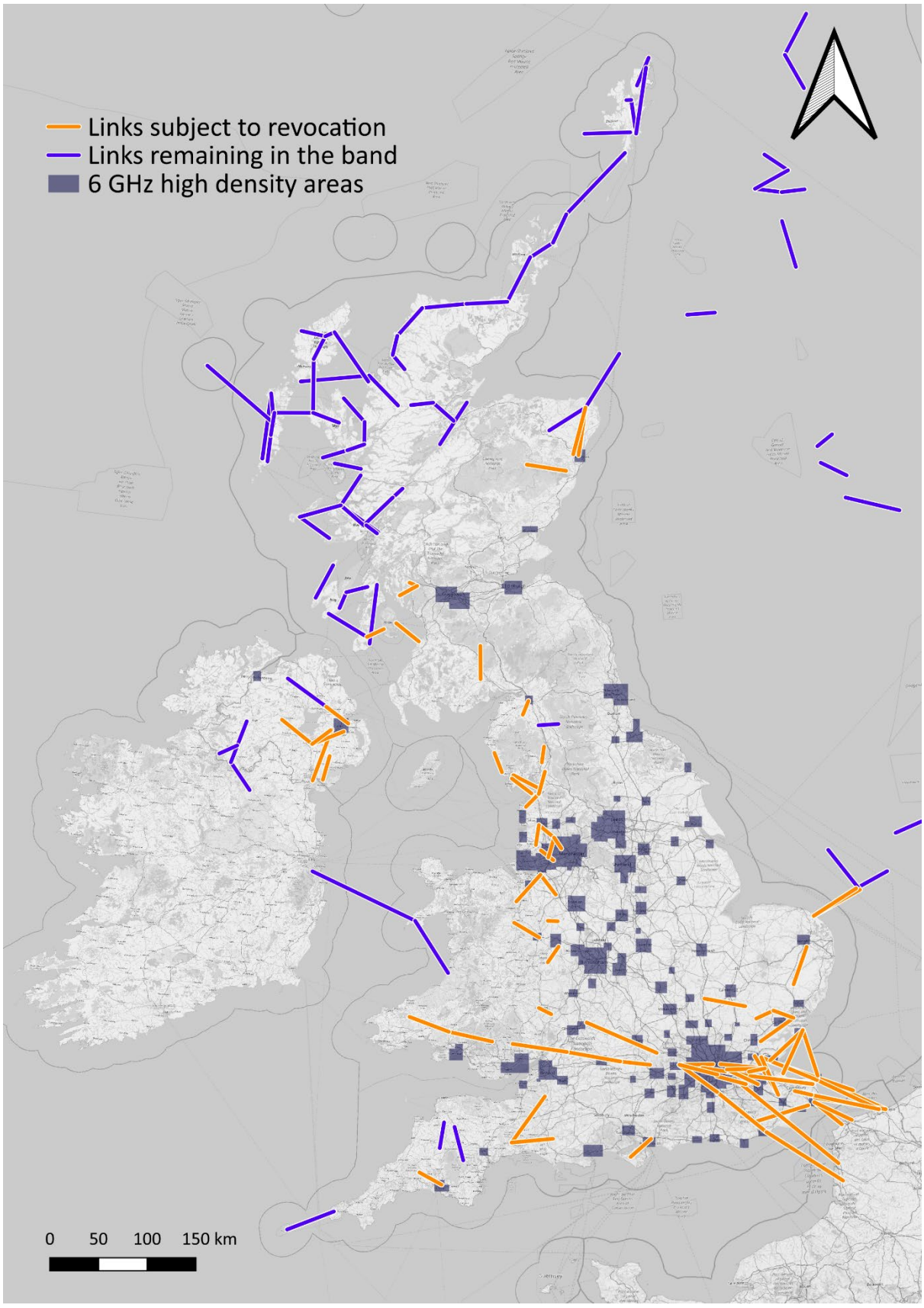

Source: Ofcom; base map © OpenStreetMap contributors

5. Other incumbent users

5.1 In this section, we set out our decisions on managing coexistence between future mobile use of the Upper 6 GHz band and other incumbent users. We consider stakeholder responses to the proposals in our April 2026 Consultation and explain the decisions we have reached in relation to PMSE, RAS and other existing users of the band.

Programme Making and Special Events (PMSE)

5.2 In our April 2026 Consultation we proposed to remove 7110–7125 MHz, which overlaps with the Upper 6 GHz band, from general PMSE use, after providing formal notice of this change.[12] We also said that, in practice, we expected these frequencies to be available for mobile use when deployments start, as typical PMSE demand could be accommodated elsewhere within the 7 GHz band.

5.3 We proposed this change to support future use of the Upper 6 GHz band, which we expect to deliver significant benefits to UK consumers and citizens. We considered that removing 7110–7125 MHz from PMSE would not materially constrain typical PMSE use, given the availability of spectrum elsewhere in the 7 GHz band.

5.4 We also proposed to retain the option of allowing PMSE to "borrow" spectrum from the Upper 6 GHz band, including 7110–7125 MHz, on an exceptional and coordinated basis for major events where there is particularly high demand for spectrum for wireless cameras. We recognise the importance of wireless camera use at such events and consider that retaining the ability to borrow spectrum on a coordinated basis would help meet occasional peaks in PMSE demand while supporting the longer-term use of the band for other services.

Stakeholder feedback

5.5 Apple, BT, Cambium Networks, Cisco, HPE and the WBA supported the proposal to remove PMSE access to 7110—7125 MHz, whilst enabling PMSE to borrow from the band for major events.

5.6 VMO2 and VodafoneThree highlighted that high PMSE demand at major events corresponds to a high level of mobile traffic, which might complicate sharing. Both stakeholders suggested future alternatives to direct access to spectrum for PMSE, such as 5G/6G solutions (VodafoneThree) or mmWave (VMO2). The BBC also suggested that a mobile presence in the band might make sharing impractical.

5.7 Several stakeholders supported clearing PMSE use in the 7110–7125 MHz band, with Cisco noting it will allow for future wireless services in the band. However, some stakeholders also noted the need of retaining flexibility for special events through borrowing or sharing mechanisms, specifically using database assisted sharing as they recognised the PMSE sector as having significant value and importance.

[12] PMSE licences are generally short term and do not require five years' notice where access to spectrum is withdrawn for spectrum management reasons. However, we proposed to provide five years' notice of this change in our April 2026 Consultation.

5.8 The BBC, however, suggested that there is no justification for removing PMSE access above 7 GHz nationally. They also stated that if fixed links will continue to be permitted in the Upper 6 GHz band outside HD areas where mobile deployment is not under current consideration, PMSE access to 7110–7125 MHz in the same areas should remain on its current basis, without any additional requirement for exceptional clearances.

5.9 The BBC expressed concern that Ofcom's proposal would reduce spectrum available to incumbent PMSE users despite there being increasing demand for wireless camera spectrum. It considered that removing access to 7110–7125 MHz on a nationwide basis could affect the availability of spectrum used to support coverage of sporting, cultural and other major events. The BBC also noted that outcomes of WRC-27 could place further pressure on spectrum available to PMSE services.

Ofcom's response and decision

5.10 We recognise that PMSE delivers economic, cultural and social benefits for the UK, and that demand for wireless camera spectrum has increased in recent years. We also recognise stakeholders' concerns about the potential impact of removing 7110–7125 MHz from regular PMSE use. Our analysis indicates that the spectrum available in the 7 GHz band remains sufficient to meet demand for the large majority of PMSE use cases.[13]

5.11 We recognise the importance of enabling continuing access to spectrum to support future PMSE requirements and are continuing to explore options to support this. This includes an agreement with the Ministry of Defence to make 7250–7300 MHz available for PMSE use, which we recently announced, subject to agreed technical and geographic constraints. We will also continue to consider longer-term PMSE spectrum requirements, including any relevant outcomes from WRC-27.

5.12 We consider that regular PMSE use of 7110–7125 MHz can generally be accommodated elsewhere within the 7 GHz band, as PMSE equipment can typically tune across the wider frequency range. Removing 7110–7125 MHz from regular PMSE use will leave 300 MHz of spectrum[14] available for wireless camera use within the 7 GHz band, which is significantly more than is required at most locations.[15] We recognise, however, that a small number of major events can generate exceptional demand and we are continuing to explore mechanisms that would enable PMSE to access additional spectrum, where required, while supporting additional future uses in the Upper 6 GHz band.

5.13 Having carefully considered stakeholder feedback, we have therefore decided to proceed with our proposal to remove 7110–7125 MHz from regular PMSE use on a nationwide basis. This will support future use of the Upper 6 GHz band and, in particular, the potential use of this spectrum to provide additional mobile capacity in areas where demand is high. In line with our consultation proposal, this Statement provides notice that regular PMSE access to 7110–7125 MHz will cease from 17 November 2031. As set out above, we consider that the

[13] See "Wireless Video in Section 4, "PMSE historic trend" in Ofcom's *Sector Spectrum Review: Programme Making and Special Events (PMSE)*, 21 January 2026

[14] Including 50 MHz of spectrum, 7250–7300 MHz, shared with the Ministry of Defence.

[15] See para. 4.38 in Ofcom's *Sector Spectrum Review: Programme Making and Special Events (PMSE)*, 21 January 2026: "95% of locations where wireless video was licensed had a maximum demand per day of less than 130 MHz". The data published alongside the publication also shows less than one percent of events used more than 250 MHz (this is usage across all bands, so 7 GHz usage would be smaller). The peak events that require borrowing used up to 640 MHz.

large majority of PMSE demand can be accommodated elsewhere within the 7 GHz band, making the 7110–7125 MHz band available for mobile use when deployments start.

5.14 We have considered the BBC's suggestion that existing PMSE access to 7110–7125 MHz should continue in areas where mobile is not deployed. We consider, however, that removing the frequencies from regular PMSE use nationally provides a clearer basis on which to authorise future use of the Upper 6 GHz band and will ensure that PMSE does not suffer interference. This does not mean that PMSE will necessarily be unable to access these frequencies where they are available. Instead, 7110–7125 MHz will form part of the spectrum that may be made available to PMSE on an exceptional and coordinated basis, where this is needed to meet peak demand and can be accommodated alongside other authorised uses of the band.

5.15 We recognise stakeholders' concerns that major events which generate particularly high PMSE demand may also generate high mobile traffic, and that this could make sharing more challenging. We do not consider that this means exceptional PMSE access would necessarily be impractical. Mobile operators may also have other options to manage exceptional peak demand, such as temporary base stations reusing other bands. As we develop the detailed arrangements for future mobile access to the band, we intend to explore the ability to facilitate coordinated PMSE access during major events where there is exceptional spectrum demand, taking account of the requirements of PMSE and other authorised users. For example, future mobile authorisations could include arrangements to facilitate PMSE access during events such as the British Grand Prix at Silverstone, where demand for 6 GHz and 7 GHz spectrum for wireless cameras is particularly high.

Radio astronomy service (RAS)

5.16 In our April 2026 Consultation, we proposed to protect the continued use of the 6650–6675.2 MHz band by the Radio Astronomy Service (RAS) by requiring MNOs to coordinate deployments so that interference at the six active radio astronomy sites does not exceed -159 dBm/50 kHz.

5.17 We acknowledged that the proposed coordination requirements could impose some deployment planning and opportunity costs on MNOs, particularly in parts of high density areas such as Manchester, Liverpool and Cambridge, where certain channels may be restricted.

5.18 However, we considered these costs were likely to be proportionate, given that the impact would be limited to relatively small geographic areas and a narrow frequency range, and that alternative spectrum channels are expected to remain available for mobile services.

Stakeholder feedback

5.19 Out of the 22 responses received, 12 commented on our proposal on RAS. Stakeholders including BT, Cisco, HPE and the WBA supported Ofcom's proposal to protect the continued use of RAS in the 6650–6675.2 MHz band by requiring MNOs to coordinate deployments such that interference does not exceed -159 dBm/50 kHz.

5.20 While there was broad support for protecting RAS, stakeholders emphasised that any protection measures should be proportionate and should not unnecessarily constrain other spectrum users. In particular, Apple and HPE recommended the use of site-specific clutter data when defining protection boundaries to avoid overly large exclusion zones, while the

DSA, VMO2 and the Wi-Fi Alliance called for further assessment to ensure an appropriate balance between RAS protection and the continued deployment of mobile and wireless services.

5.21 VodafoneThree supported the use of a Coordination Notice and stressed the need for early engagement between RAS users and mobile operators to develop practical coexistence solutions, including the potential for time-sharing arrangements.

5.22 Cambium Networks, Ericsson and VodafoneThree also called for further discussion and greater clarity on the proposed measures ahead of a future spectrum award process to ensure that operators and bidders fully understand the associated constraints, opportunities, and coordination requirements.

Ofcom's response and decision

5.23 We acknowledge stakeholders' views that measures to protect RAS should be proportionate and should avoid imposing unnecessary constraints on the deployment of other spectrum users. We have taken this into account in our assessment. Our analysis used appropriate and up-to-date clutter, terrain and propagation data and indicates that the effect of the proposed protection requirements on mobile deployment is likely to be limited, given the relatively small geographic areas and narrow frequency range to be protected.

5.24 We consider that coordination provides an appropriate and flexible mechanism for implementing this protection. It allows individual deployments to be assessed taking account of local conditions, rather than relying solely on fixed geographic exclusion zones. It also allows mobile licensees and RAS site operators to explore appropriate mitigations and coexistence arrangements, while ensuring the required protection for RAS observations.

5.25 Having carefully considered stakeholder feedback, we have therefore decided to proceed with our proposal to protect continued RAS use of the 6650–6675.2 MHz band by requiring mobile licensees to coordinate deployments so that interference at the six active radio astronomy sites does not exceed -159 dBm/50 kHz. We consider this requirement proportionate because it provides the necessary protection for existing RAS use while having a limited impact on the deployment of mobile services.

5.26 We will implement these requirements through a Coordination Notice issued to relevant licensees. We will engage with stakeholders on the detailed coordination arrangements in due course and before the award. We expect these arrangements to include our standard clutter, terrain and propagation models, and will consider how they can provide sufficient flexibility for mobile licensees and RAS site operators to agree appropriate local mitigation or coexistence arrangements, including where relevant the types of time-sharing arrangements suggested by stakeholders.

Other users of the band

5.27 In our April 2026 Consultation, we proposed not to implement any UK-specific mitigation measures to protect sea surface temperature (SST) measurements, while remaining open to considering any effective and proportionate alternatives put forward by stakeholders.

5.28 We recognised that interference from future mobile services in the 6425–7075 MHz Earth Exploration Satellite Service (EESS) band could impact SST measurements over relatively large areas off the UK coast. However, we considered that mitigation measures

implemented by individual countries risked being ineffective and noted the consensus among European administrations that interference management would be better addressed at the international level.

5.29 We also highlighted ongoing international work, including preparations for WRC-27, to identify alternative spectrum for SST measurements that can be internationally harmonised. Given the expected timescales for mobile rollout and work underway on alternative spectrum solutions, we considered that the protection of SST measurements was more likely to become a longer-term consideration.

5.30 We also considered coexistence between mobile services and Tank Level Probing Radar (TLPR) in the 6 GHz band. We provisionally concluded that this was unlikely to give rise to significant interference concerns. This reflected the technical and operational characteristics of TLPR, including its use in predominantly industrial environments, operation within enclosed tanks and vats, downward-facing antennas, and the application of automatic power control, all of which reduce the potential for interference both to and from mobile networks.

5.31 We similarly provisionally concluded that no additional mitigation measures would be required for Ultra-Wideband (UWB) devices in the 6 GHz band. UWB devices operate on a non-interference, non-protection basis at very low power levels across a wide frequency range, which facilitates spectrum sharing. We acknowledged that mobile network deployments could result in some degradation to UWB performance on individual channels, particularly for outdoor devices. However, given the availability of alternative UWB channels, we considered that the overall impact would be limited and would not justify specific mitigation requirements.

5.32 For satellite receivers operating in the 6425–7075 MHz band, we provisionally concluded that coexistence with mobile services could be achieved through the application of the technical measures agreed internationally at WRC-23. We noted that extensive compatibility studies undertaken ahead of WRC-23 led to the development of a vertical elevation EIRP mask, which limits the power that mobile base stations can emit at different angles above the horizon. We considered that these limits would provide adequate protection for satellite receivers and therefore proposed incorporating the WRC-23 EIRP mask into the technical licence conditions for future mobile deployments.

5.33 Finally, we considered that coexistence between mobile services and Ministry of Defence (MOD) use of the Upper 6 GHz band was unlikely to present significant challenges. We noted that MOD use of the band is limited to a small number of remote locations and therefore was not expected to have a material impact on future mobile deployments. While we acknowledged that MOD operations could, in some circumstances, result in occasional interference to nearby mobile equipment, we did not identify a need for restrictions on mobile deployments in high density areas to accommodate MOD use, nor did we provisionally consider it necessary for MOD to modify its existing use of the band.

Stakeholder feedback

5.34 Out of the 22 responses received, 11 respondents commented on our proposals for protecting other incumbents in the band.

5.35 Several respondents supported relying on internationally harmonised measures, rather than introducing UK-specific requirements, to protect incumbent services. Apple, Cisco, the DSA, Ericsson and Federated Wireless supported this approach in relation to SST

measurements and the Fixed Satellite Service (FSS), including the use of technical measures agreed at WRC-23 where relevant.

5.36 While the Met Office, European Space Agency (ESA), and European Centre for Medium-Range Weather Forecasts (ECMWF) did not respond to the April 2026 Consultation, they highlighted in their responses to our AFC consultation that the absence of an explicit protection mechanism could risk degradation of satellite data used for weather forecasting, including future observations from the Copernicus CIMR mission. However, stakeholders including Apple, Cisco and the DSA supported our proposed approach of not introducing UK-specific measures to protect SST measurements.

5.37 Respondents commenting on coexistence with MOD use were also supportive of our proposed approach. Apple and Cisco favoured site-specific coordination with MOD users, rather than the use of extensive exclusion zones.

5.38 More broadly, Wi-Fi proponents, including Cisco, the DSA, Federated Wireless and HPE, supported greater use of coordinated, database-driven approaches to spectrum sharing. They considered that AFC and similar coordination mechanisms could enable more efficient spectrum use and improved wireless connectivity while continuing to protect incumbent users and reducing the need for broader restrictions.

Ofcom's response and decision

5.39 We acknowledge the concerns raised by the Met Office, ESA, and ECMWF in response to the AFC consultation regarding the potential impact of mobile use on passive Earth observation services, including SST measurements. As noted in our AFC Statement, we consider that future mobile services operating in the band are likely to represent the dominant interference risk to EESS.

5.40 We recognise the importance of SST measurements for weather forecasting and climate modelling. We note that international work is under way to identify alternative spectrum for SST measurements, including preparations for WRC-27. Furthermore, we expect mobile deployment in the band to be limited before 2032.

5.41 Taking these factors into account and considering that EESS does not have a primary allocation or protected status in the band, we remain of the view that it would not be proportionate to introduce UK-specific measures to protect SST measurements from future mobile use. We consider that the longer-term coexistence issue is better addressed through internationally coordinated solutions rather than measures introduced by individual countries. We will therefore continue to support international efforts to secure a harmonised allocation for SST measurements in an alternative frequency band, including ongoing work within the ITU-R in preparation for WRC-27.

5.42 We have also considered the responses relating to the Fixed Satellite Service. Considering the support for our proposed approach, we remain of the view that the EIRP mask agreed at WRC-23 provides appropriate protection for satellite receivers. We will therefore incorporate the WRC-23 EIRP mask into the relevant technical conditions for future mobile deployments.

5.43 We did not receive any responses to the consultation on our assessment of coexistence with UWB devices. Given their very low power levels, operation on a non-interference, non-protection basis, and access to alternative channels, we remain of the view that no additional measures are needed to protect UWB devices from mobile services.

5.44 Similarly, respondents did not comment on our assessment that coexistence with existing MOD use can be managed without broader restrictions on mobile deployment. We recognise that existing MOD uses could cause occasional interference to nearby mobile services. However, given the limited geographic and temporal nature of MOD use, we do not consider it necessary or proportionate to restrict mobile deployments in high density areas to accommodate MOD use, or to require MOD to change its existing use of the band.

5.45 We have therefore decided to proceed with our proposed approach to these other users of the band, supporting internationally agreed measures where appropriate and not introducing additional UK-specific restrictions beyond those described above.

A1. Legal framework

A1.1 Ofcom's statutory powers and duties in relation to spectrum management are set out primarily in the Communications Act 2003 ("the 2003 Act") and the Wireless Telegraphy Act 2006 ("the WT Act").

Duties under the Communications Act 2003

A1.2 Our principal duties under the 2003 Act, when carrying out our functions and exercising our powers, are to further the interests of citizens and consumers, where appropriate by promoting competition. In doing so, we are also required (among other things) to secure the optimal use of spectrum and the availability throughout the United Kingdom of a wide range of electronic communications services.

A1.3 We must also have regard to:

a) the desirability of promoting competition in relevant markets;
b) the desirability of encouraging investment and innovation in relevant markets;
c) the desirability of ensuring the security and availability of public electronic communications networks and services;
d) the different needs and interests, so far as the use of the electro-magnetic spectrum for wireless telegraphy is concerned, of all persons who may wish to make use of it; and
e) the different interests of persons in the different parts of the United Kingdom, of the different ethnic communities within the United Kingdom and of persons living in rural and in urban areas.

A1.4 In performing our duties, we are required under section 3(3) of the 2003 Act to have regard in all cases to the principles under which regulatory activities should be transparent, accountable, proportionate, consistent and targeted only at cases in which action is needed, and any other principles appearing to Ofcom to represent the best regulatory practice.

A1.5 In carrying out certain regulatory functions, including Ofcom's spectrum management functions, section 4 of the 2003 Act requires Ofcom to act in accordance with the following requirements:

a) to promote competition in communications markets;
b) to promote the interests of all members of the public in the United Kingdom;
c) to act in a manner which, so far as practicable, is technology neutral;
d) to encourage, to the extent Ofcom considers it appropriate, the provision of network access and service interoperability for the purpose set out in s.4(8);
e) to encourage such compliance with certain international standards as is necessary for the purposes set out in s.4(9); and
f) to promote connectivity and access to very high capacity networks by members of the public and businesses in the United Kingdom.

Growth duty

A1.6 Section 108 of the Deregulation Act 2015 requires Ofcom to have regard to the desirability of promoting economic growth when exercising its regulatory functions. In order to

consider the promotion of economic growth, Ofcom will exercise its regulatory functions in a way that ensures that:

a) regulatory action is taken only when it is needed, and
b) any action taken is proportionate.

A1.7 The Government's statutory guidance on this duty recognises drivers of economic growth to include innovation and competition.

Duties under the Wireless Telegraphy Act 2006

A1.8 In carrying out our spectrum functions we have a duty under section 3 of the WT Act to have regard in particular to:

a) the extent to which the spectrum is available for use, or further use, for wireless telegraphy;
b) the demand for use of that spectrum for wireless telegraphy; and
c) the demand that is likely to arise in future for such use.

A1.9 We also have a duty to have regard to the desirability of promoting:

a) the efficient management and use of the spectrum for wireless telegraphy;
b) the economic and other benefits that may arise from the use of wireless telegraphy;
c) the development of innovative services; and
d) competition in the provision of electronic communications services.

A1.10 Amongst our functions and powers in relation to spectrum are the making available of frequencies for use for particular purposes and the granting of rights of use through wireless telegraphy licences and licence exemptions.

Ofcom's powers to vary or revoke licences granted under the Wireless Telegraphy Act 2006

A1.11 Ofcom has a broad discretion under paragraph 6 of Schedule 1 to the 2006 Act to vary or revoke licences, so long as such revocation or variation is objectively justifiable, by providing the licence holder with notice in writing. We also have a general duty not to discriminate unduly between operators and to ensure that our interventions are proportionate, consistent and targeted only at cases in which action is needed (2003 Act, s.3(3)). Ofcom must act in accordance with its statutory duties and general legal principles, including the duties to act reasonably and rationally when making decisions and to take account of any legitimate expectations.

A1.12 Paragraph 7 of Schedule 1 of the WT Act sets out the process which Ofcom must follow where it proposes to vary or revoke a wireless telegraphy licence. In summary, Ofcom is required to take the following steps:

a) notify the licensee of the reasons for the proposed variation or revocation;
b) specify a period of at least 30 days in which the licensee may make representations about the proposal; and
c) decide whether or not to vary or revoke the licence within one month of the end of that period and notify the licensee of that decision.

A1.13 Where a proposal to vary or revoke a wireless telegraphy licence is made with the consent of the licensee, Ofcom is not required to follow the above process.

A1.14 Ofcom may include in a wireless telegraphy licence terms restricting the exercise of its power to revoke or vary licences (WT Act, para. 8 of Sch. 1), such as requiring a certain notice period for revoking a licence for spectrum management reasons. However, Ofcom may at any time revoke or vary a licence if it appears to be necessary or expedient in the interests of national security, or for the purpose of securing compliance with an international obligation (WT Act, para. 8(5) of Sch. 1).

Impact Assessments

A1.15 Section 7 of the 2003 Act requires us to carry out and publish an assessment of the likely impact of implementing a proposal which would be likely to have a significant impact on businesses or the general public, or when there is a major change in Ofcom's activities. Impact assessments help us to understand the potential impact of our policy decisions before we made them. They also help us to explain the policy decisions we have decided to take and why we consider those decisions best fulfil our applicable duties and objectives in the least intrusive way.

A1.16 As a matter of policy, Ofcom is committed to carrying out and publishing impact assessments in relation to the great majority of our policy decisions, although the form of that assessment will depend on the particular nature of the proposal. Our impact assessment guidance sets out our general approach to how we assess and present the impact of our proposed decisions.

A1.17 We also have statutory obligations which require us to consider the impact on specific groups of persons when formulating policy proposals. These are:

a) our public sector equality duties under section 149 of the Equality Act 2010 (the "Equality Act") and section 75 of the Northern Ireland Act 1998 (the "NI Act") including potential impacts on the groups of persons identified in those sections as having protected characteristics;
b) potential impacts on the needs and interests of groups of persons identified in Section 3(4) of the 2003 Act. This includes the needs of persons with disabilities, of the elderly and of those on low incomes; and
c) where the Welsh Language Standards are engaged, potential impacts on opportunities to use Welsh and treating Welsh no less favourably than English.

A1.18 Annex A2 of this document contains our provisional assessment of the impact of our policy proposals for the purposes of section 7 of the 2003 Act. We have integrated our impact assessment for each of our specific proposals throughout Annex A2, and therefore within our broader discussion of why we consider these proposals are appropriate. The impact assessment at Annex A2 sets out our provisional impact assessment regarding the impact of our proposals on persons that share protected characteristics under the Equality Act and NI Act and other groups of persons. It also sets out our provisional assessment of the impacts of our proposals on the Welsh Language.

A2. Impact assessments

Impact assessment

A2.1 Annex A1 sets out the legal framework for our impact assessment. Below we discuss how our decisions may affect relevant stakeholders, including citizens and consumers, in more detail. For each policy we consider any benefits, costs, and risks.

Decision on high density areas for Upper 6 GHz

A2.2 Due to its technical characteristics, Upper 6 GHz spectrum is more suited to providing additional capacity in high density areas than to providing wide-area coverage. This spectrum is therefore likely to be deployed in areas with high data capacity needs, such as towns and cities. Section 3 sets out our decision to confirm the high density areas for a future Upper 6 GHz award as proposed in our April 2026 Consultation.

A2.3 We remain of the view that enabling mobile access to Upper 6 GHz in high density areas will lead to the most efficient use of the spectrum, as it would give MNOs the ability to freely deploy this spectrum in the areas where they are more likely to need it. Enabling mobile access in the Upper 6 GHz would increase investment in mobile networks where there is demand and enable improved mobile services for consumers and citizens, thereby promoting economic growth.

A2.4 At the same time our approach allows other uses to have access to the spectrum outside of these areas where the spectrum may otherwise not be extensively deployed, thereby maximising the use of the spectrum and, therefore, the benefits derived from it. As noted below in paragraph A2.6.c, we do not expect any future decision on mobile deployment outside of these high density areas to be implemented before 2035. This should provide such users with some certainty on spectrum availability, which should act as an incentive to invest in the use of the band outside of these areas.

A2.5 There is a risk that the high density areas may be defined too narrowly and that MNOs may want to extensively deploy outside of these areas but are unable to do so.[16] For example, this could occur if mobile demand develops outside high density areas.

A2.6 Overall, we consider this risk to be low and that we have reasonable mitigations:

a) We expect this risk to be low because of the extensive evidence we have used to develop the list of high density areas. The current evidence suggests that Upper 6 GHz spectrum will be used primarily to provide additional capacity rather than extend network coverage. Our analysis therefore considered population density, mobile traffic, and existing mobile deployments in other bands to identify demand for capacity. This evidence provides a reasonable estimate of where there is likely to be demand for additional capacity and, therefore, where the Upper 6 GHz spectrum is likely to be deployed for mobile.

[16] This is a concern raised by all three MNOs and other stakeholders, as noted in paragraphs 3.4–3.7. Huawei shared this concern and considered that the consultation did not provide sufficient cost-benefit analysis of this concern. In this annex we set out the impact assessment of our decision, including our considerations relating to this risk.

b) We also expect that any mobile demand for Upper 6 GHz spectrum beyond the high density areas will only materialise later in the deployment cycle and this limits any potential welfare loss from constraints on deployment. This is because we expect mobile deployment to start in the centre of high density areas, where demand is likely to be highest, and expand progressively towards the outer boundaries.

c) As set out in paragraph 3.28, if future evidence for the need for mobile deployment outside of these areas emerges, we will consider possible solutions to enable them. However, we do not expect any future decision on mobile deployment outside of these high density areas to be implemented before 2035. Moreover, our decision to enable early access to the mobile priority portion of the band using AFC allows us to manage Wi-Fi use in the band to enable mobile deployment outside the high density areas we have defined, should that be necessary at a later date.

A2.7 Another risk is that MNOs may not deploy extensively in areas we have included in our definition of high density areas, while other users may have demand for the spectrum in that location.[17]

A2.8 We also consider this risk to be low. This is because the evidence we have used to define high density areas provides a reasonable estimate of where there is likely to be demand for additional capacity and, therefore, where the Upper 6 GHz spectrum is likely to be deployed for mobile. However, if this risk crystalises, other users may be able to use the spectrum in places and at times when mobile has not deployed. They could do so using AFC. This should further mitigate this risk.

A2.9 Finally, as noted in paragraphs 3.18 and 3.19, we do not consider that our definition of high density areas risks limiting 6G deployment or disadvantaging any areas that are not within high density areas at this stage. We have not seen evidence that the likely features of 6G are specific to 6 GHz, and we would expect that 6G deployments in other bands to be possible. Furthermore, as previously stated, we will address mobile use outside of high density areas in the future if we see evidence for such a need.

A2.10 Overall, our view is that our approach to defining the high density areas for Upper 6 GHz is reasonable and proportionate, and ensures the optimal use of the spectrum. We assess the risks associated with our approach to be relatively low and have possible mitigations if they crystalise.

Decision to clear fixed links in and around high density areas

A2.11 Fixed links will not be able to coexist in areas where there is extensive mobile use of the band without imposing restrictions on mobile deployment. In our April 2026 Consultation, we stated:

a) To achieve the benefits of mobile use, we consider it necessary and proportionate to clear fixed links in and around high density areas. The band will be closed for future fixed links applications within high density areas.

b) This proportionality assessment reflected our view that the main cost of clearing the Upper 6 GHz band in these areas would be the cost of migrating affected links to

[17] This is a risk raised by Wi-Fi proponents, as noted in paragraph 3.9.

alternative bands, and that this cost was likely to be lower than the benefits of making the spectrum available for mobile.[18]

A2.12 Our view remains that there will be significant benefits to mobile use and to achieve these benefits it would be necessary to clear fixed links in and around high density areas.

A2.13 We next consider how these benefits compare to the costs of clearing average links and how the benefits compare to the costs of clearing specific high-cost links.

A2.14 As set out in Annex 3, we estimated the costs of migrating the affected fixed links. This estimate used cost information submitted in response to our RFIs and included costs such as the early replacement of equipment that had not reached the end of its useful life and, where relevant, the addition of hops when moving to higher-frequency bands. Our model estimated total migration costs for onshore fixed links of around £14.25m in the baseline scenario.[19] [20] Although it excluded certain outlier costs, it provided a representative basis for assessing the aggregate costs of our proposal.

A2.15 Some fixed link providers, including Energy Connect and [✂], disagreed with our assessment that the benefits to citizens and consumers of making the Upper 6 GHz band available for mobile use in high density areas are likely to outweigh the benefits of its continued use for fixed links, noting the importance of the services that rely on these fixed links.[21] However, as noted in the consultation, we expect that most of the fixed links that we have decided to clear will be able to migrate to other alternatives. This means that the services that use these fixed links would continue to operate and benefit citizens and consumers.

A2.16 We consider the risk of a negative impact to the underlying service that the fixed links provides to be low and mitigated, such that any service disruption or impact should be relatively small and, at most, temporary (e.g., disruptions that may occur during the migration process to another frequency). In particular:

a) We expect that some users will be able to use alternative spectrum bands to deploy fixed links, including the other bands in their current spectrum portfolio. In other cases, we expect that alternatives such as fibre are likely to be available. Therefore, we consider the risk to these fixed links users to be relatively low.

b) We note that Ofcom is required to give licensees five years' notice for any licence we propose to revoke for spectrum management reasons, and this should give licensees who receive a notice of revocation sufficient time before it takes effect to put in place alternative arrangements.

---

[18] In the April 2026 Consultation, we also considered alternative approaches for how fixed link coexistence in high density areas could be managed (e.g. clearing fixed links nationwide, or relying on future licensees to manage coexistence issues with any incumbent users through bilateral negotiations). No stakeholder indicated that any of these alternative approaches was preferrable to our targeted clearance approach in and around high density areas. Therefore, we do not consider these alternatives further in this Statement.

[19] We note that compared to our April 2026 Consultation, we are no longer proposing to revoke some of the fixed links that we had identified as candidates for revocation as they would have a very small impact on mobile deployments as described in paragraph 4.41.

[20] We also presented in Annex A3 a conservative-case estimate of the cost of clearance under this option of approximately £70.6m. As explained in that Annex, we have produced a highly conservative estimate of the potential cost, and think that this is an extreme upper-bound of what the potential cost of clearance would be in practice under this option.

[21] JRC consultation response, page 6.

A2.17 There may also be administrative costs for industry and Ofcom associated with revoking existing licences and issuing new ones where links migrate to other frequencies, but we expect these costs to be relatively small.

A2.18 Based on our assessment of the cost of moving an average link and our sensitivity analysis, our view continues to be that the overall cost these licensees may incur to move to alternative bands is proportionate, when weighed against the potential benefits of making the band available for mobile use.

A2.19 Apart from general views on the impact of clearing fixed links, some stakeholders raised concerns regarding the costs and practical challenges associated with migrating particular fixed links to alternative bands, as discussed in paragraphs 4.11 to 4.13. In response to these concerns, we undertook a more detailed coexistence assessment of individual fixed links, taking account of their specific circumstances, as set out in paragraphs 4.34 to 4.41. This assessment informed our final decisions on which links should be subject to the revocation process and which should be retained.

A2.20 Broadly, our assessment of individual links considered specific onshore and offshore links. As set out in paragraphs 4.41, based on this assessment we now consider that some of the onshore links we had included on the revocation list in our consultation would have a very small impact on mobile deployments, e.g. would affect only a small number of sites, with these sites likely requiring small adjustments to protect these fixed links.[22] It would therefore be disproportionate to clear them.

A2.21 With regards to specific arguments regarding the cost of moving offshore links, we note that [✂] indicated that some of their links had offshore end points and, as such, the costs that we had modelled were not reflective of their specific circumstances. [✂] in particular noted that some of its offshore fixed links could only be replaced with undersea fibre cables with a cost upwards of [✂]. [✂] also noted that it may not be possible to migrate a link to an alternative band, e.g., because the link is too long and there are no viable alternative band that meets the required path length, or the link is offshore and an alternative higher frequency band would degrade performance due to multipath fading, or the need to add additional hops on water.

A2.22 Some of these specific offshore links would incur higher costs to move to alternative frequencies or technologies, such as subsea fibre, than our cost model estimates. We have therefore assessed in more detail the impact on mobile of retaining these links. We found that retaining these links could significantly limit mobile deployment over large geographic areas, for example in Norwich and high density areas around Essex and Kent. As such, despite the higher cost of migrating these links, we have decided that it is still proportionate to propose these fixed links for revocation.

A2.23 Overall, we consider that clearing fixed links in and around high density areas remains proportionate, except for the specific onshore links decisions described above. In most cases, the benefits to UK consumers and businesses of making the spectrum available for mobile use outweigh the costs imposed on existing fixed-link users. However, where the impact on mobile is likely to be small, we have decided not to propose revocation of the licence. Where retaining a link would continue to impose a significant constraint on mobile

[22] Some of the measures that MNOs could take include beam steering, allowing MNO to still deploy the spectrum but taking care not to steer beams towards the fixed links to avoid interference.

deployment, we consider proposing revocation to be proportionate, taking account of the availability and suitability of alternatives and the five-year notice period.

Decision on the future use of the Upper 6 GHz band by fixed links outside high density areas

A2.24 As set out in paragraph 4.28, we do not intend to clear any additional fixed links from the Upper 6 GHz band, even if we enable mobile use outside the high density areas we have defined following a future consultation. This will provide more certainty for fixed links providers looking to deploy in the band.

A2.25 The Upper 6 GHz band will remain open to new fixed link applications outside of high density areas, provided they pass our coordination checks. As mobile deployment outside high density areas is likely to be limited, we expect that there will generally be sufficient spectrum to accommodate new fixed links and other potential uses. As such, we provisionally consider that it is unnecessary to restrict future use of the band for fixed links outside high density areas.

A2.26 The main benefit of allowing new fixed links to be deployed outside of high density areas is that it provides users about certainty, enabling investment into improved services for consumers and citizens.

A2.27 We expect limited costs from keeping the band open to new fixed links compared to closing the band. Some of the new users in the band may need to consider the arrival of new fixed links when coordinating their deployments. For example, AFC Wi-Fi may need to move to alternative channels once a new fixed link in its vicinity is added to the AFC database, but this is exactly how AFC-enabled Wi-Fi is expected to operate.

A2.28 As we noted in paragraph A2.5, there is a risk that mobile demand may evolve to require deployment outside the high density areas we have defined. This could risk a situation where mobile deployments need to be coordinated with additional fixed links outside of the current high density areas, compared to a counterfactual where we close the band to new fixed link applications outside these high density areas. However, as we discussed, this risk should be limited as we do not expect mobile deployments outside of the current high density areas to be extensive and, therefore, we would not expect the need to protect additional fixed links to materially impair any such deployments.

A2.29 Allowing new fixed link applications could also risk limiting the amount of Upper 6 GHz spectrum available for Wi-Fi. This is because new fixed links would have priority over Wi-Fi under AFC. We addressed this risk in our January 2026 Statement and Further Consultation. We said that we expect in most cases there would be enough spectrum to accommodate both uses and, where this is not the case, Wi-Fi would be able to use other frequencies, for example, the Lower 6 GHz band.

A2.30 Overall, we consider that the benefits of keeping the band open to new fixed link applications outside high density areas outweighs the potential risk and costs.

Decisions relating to other incumbents

A2.31 As set out in Section 5, we have decided on measures to address mobile's coexistence with other incumbent users. We consider that these decisions will benefit citizens and consumers in high density areas as they will enable improved mobile services. Below we consider the costs and risks that stakeholders would incur to implement these measures.

We consider these costs to be proportionate compared to the benefit to citizens and consumers from higher capacity mobile.

PMSE

A2.32 In relation to PMSE, the 7110–7125 MHz overlaps with the Upper 6 GHz band and we are removing it from the 7 GHz PMSE allocation. This spectrum will become unavailable from 17 November 2031, which is five years after the date of this Statement, on a nationwide basis. We have also decided that these frequencies will remain available as part of the borrowed band, subject to coordination, both inside and outside high density areas.

A2.33 We expect that enabling mobile to use of the 7110–7125 MHz band will deliver benefits to citizens and consumers by providing additional capacity in high density areas, improving mobile services. Our approach aims to guarantee these benefits while maintaining access for PMSE for major events, when there is a need for additional demand for PMSE services.

A2.34 We expect the costs of our PMSE decisions to be very low. PMSE equipment is generally able to operate in other frequencies in the 7 GHz band that are not affected by our decisions. On this basis, PMSE equipment should remain usable without a material loss of capability or additional replacement costs.

A2.35 We recognise that our decision may risk reducing the spectrum available for major events, as stakeholders suggested (see paragraphs 5.6 and 5.9). We will continue to explore options to support future PMSE spectrum needs,[23] including through the borrowed band, particularly outside high density areas. We will take this into account when implementing the licensing conditions for mobile.

RAS

A2.36 We have decided to require that mobile base stations do not create interference exceeding -159 dBm/50kHz in the 6650–6675.2 MHz band used by RAS, at each of the six radio astronomy sites currently active in the band.

A2.37 As noted in paragraphs 5.19 to 5.22, stakeholders generally supported the protection of RAS sites but emphasised that protection measures should be proportionate and avoid imposing unnecessary constraints on other spectrum users wherever possible.

A2.38 Protecting RAS use of the band will deliver benefits by allowing scientifically valuable observations to continue across the six active radio astronomy sites, preserving the UK's existing radio astronomy capabilities.

A2.39 We recognise that imposing a coordination requirement on the MNOs to protect the RAS sites may impose a cost on MNOs associated with planning deployments around these RAS sites, especially in parts of high density areas. It may also impose an opportunity cost, as some channels (or parts of channels) may not be useable to provide mobile services for consumers around the protected areas. However, this cost should be relatively low as it will only affect certain parts of high density areas in most cases and only a very narrow frequency range, such that the loss of capacity from the affected base stations will be small.

[23] For example, as set out in paragraph 5.11, we have recently announced an agreement with the Ministry of Defence to make the 7250–7300 MHz band available for PMSE use, subject to agreed technical and geographic constraints.

EESS

A2.40 In relation to EESS, we recognise concerns previously raised by meteorological stakeholders regarding the importance of sea-surface temperature measurements and the potential long-term impact of increased mobile deployment densities. However, we remain of the view that this issue is best addressed through international action, including ongoing preparations for WRC-27 to identify alternative spectrum for SST measurements. We therefore do not consider that additional UK-specific restrictions on mobile deployment would be proportionate at this stage.

Other users

A2.41 In relation to fixed satellite services, MOD's uses, SRDs and UWB devices, we have decided to proceed with the approach proposed in our consultation and not introduce any additional protection measures for these incumbent users at this stage. We consider the risk of interference to be low, specifically:

a) **Fixed satellite services**: as set out in paragraph 5.42, we consider that the EIRP mask agreed at WRC-23, including the limits on emissions above the horizon that are intended to protect satellite systems, will provide sufficient protection to satellite receivers operating in the band and we intend to include this mask in the technical licence conditions for future mobile deployment. Therefore, any risk of interference should be low.
b) **MOD**: it is possible that MOD uses could cause occasional radio interference to nearby mobile services. However, as MOD uses the spectrum on a limited geographic and temporal basis, we consider it proportionate not to impose any restrictions on mobile to accommodate MOD uses, nor ask MOD to make any changes to their use.
c) **SRDs**: The main SRD application in the band is for Tank Level Probing Radar (TLPR). The isolation inherent to TLPR should avoid any interference between mobile and TLPR.
d) **UWB devices**: these devices are authorised on a non-interference and non-protection basis. Mobile might cause some degradation to UWB devices operating outdoors. However, this will only be to one frequency channel and we expect other channels to be available to the UWB device.

A2.42 Overall, we consider that our decisions for other incumbent users are reasonable and proportionate. We consider that they will maximise the benefits of mobile services in high density areas while maintaining targeted protections where the benefits of continued incumbent use justify the constraints on mobile deployment. Where we have decided not to introduce additional protections, we consider that it would not be proportionate to constrain mobile deployments to protect such services. As noted in paragraphs 5.34 to 5.37, stakeholders broadly agreed with our approach to protect all other incumbents.

Conclusion

A2.43 Overall, we consider that our decision taken together are proportionate and objectively justifiable, and ensure the optimal use of the spectrum. They will enable the benefits from mobile where the spectrum is more likely to be needed for this use, while maintaining the availability of the spectrum for other uses in other areas. Any impact on stakeholders will be proportionate to the benefits.

Equality impact assessment

A2.44 We have given careful consideration to whether our decisions will have a particular impact on persons sharing protected characteristics (broadly including race, age, disability, sex, sexual orientation, gender reassignment, pregnancy and maternity, marriage and civil partnership and religion or belief in the UK and also dependents and political opinion in Northern Ireland), and in particular whether they may discriminate against such persons or impact on equality of opportunity or good relations. This assessment helps us comply with our duties under the Equality Act 2010[24] and the Northern Ireland Act 1998.[25] We have also had regard to the matters in Section 3(4) of the Communications Act.[26]

A2.45 When thinking about equality we think more broadly than persons that share protected characteristics identified in equalities legislation and think about potential impacts on various groups of persons (see paragraph 4.7 of our impact assessment guidance).

A2.46 In particular, Section 3(4) of the Communications Act also requires us to have regard to the needs and interests of specific groups of persons when performing our duties, as appear to us to be relevant in the circumstances. These include:

a) the vulnerability of children and of others whose circumstances appear to us to put them in need of special protection;
b) the needs of persons with disabilities, older persons and persons on low incomes; and
c) the different interests of persons in the different parts of the UK, of the different ethnic communities within the UK and of persons living in rural and in urban areas.

A2.47 Our decisions will give additional spectrum access to Wi-Fi and mobile services, which will likely increase capacity and speed of both, bringing benefits to UK consumers and industry. We consider the use of Upper 6 GHz by these applications will predominantly be in high density areas, such as town and cities, or where there is high demand for these applications. We have not identified any adverse impacts on specific groups of persons that are likely to be affected in a different way to the general population.

A2.48 The introduction of mobile in the mobile priority part of the band has potential to impact some other wireless services. In particular, we are deciding to revoke fixed links around high density areas to enable the benefits of improved mobile access to citizens and consumers.

A2.49 When considering how these revocations could affect the different interests of persons in different parts of the UK, we identified a relatively high number of Upper 6 GHz fixed links in Northern Ireland which are used for public services or utilities, compared to the rest of the UK, and some may enable critical functions. We anticipate that, in most cases, there should be alternative ways to deliver the same service, for example using frequencies in similar bands. Where this is not possible or appropriate, we will consider exceptions on a case-by-case basis, as part of the statutory revocation process. This may result in mobile operators needing to protect a small number of remaining links.

A2.50 Our assessment is that this process, which is the same we will apply across the UK, will find the best balance between enabling the benefits of enhanced mobile services in Northern Ireland and preserving the benefits of these fixed links. Therefore, our decisions are likely

[24] Equality Act 2010
[25] Section 75 of the Northern Ireland Act 1998
[26] Section 3(4) of the Communications Act 2003

to maximise the benefits of the band in Northern Ireland in the same way as in the rest of the UK.

A2.51 We did not identify any other potentially relevant issues and, in conclusion, we do not consider that our decisions will affect any specific groups of persons (including persons that share protected characteristics under the 2010 Act or the 1998 Act) differently to the general population.

A2.52 Ofcom can provide information in a variety of formats on request, e.g., accessible PDF, large print, easy read, audio recording or braille. If you let us know what information you require and in what format, we will consider the request and respond within 21 days.

Welsh language

A2.53 Ofcom is required to take Welsh language considerations into account when formulating, reviewing or revising policies which are relevant to Wales (including proposals which are not targeted at Wales specifically but are of interest across the UK).[27]

A2.54 We do not consider our decisions have any impact on opportunities for persons to use the Welsh language or treat the Welsh language less favourably than the English language. We also do not think there are ways in which our decisions could be formulated so as to have, or increase, a positive impact, or not have adverse effects or decrease any adverse effects. This is because our decisions relate to spectrum access across the UK.

A2.55 We note that Ofcom's current practice is to offer to produce spectrum licences in Welsh, and when requested does provide licences in Welsh, in accordance with its obligations set by the Welsh Language Commissioner. This will apply to licences discussed in this document.

[27] See Standards 84–89 of Hysbysiad cydymffurfio (in Welsh) and compliance notice in English. Section 7 of the Welsh Language Commissioner's Good Practice Advice Document provides further advice and information.

A3. Upper 6 GHz Cost of Fixed Link Clearance Model

A3.1 This annex outlines the methodology and results of our modelling exercise, which estimates the potential costs associated with clearing fixed links from the Upper 6 GHz band.

A3.2 The outcomes of this modelling exercise support our evaluation of the proportionality of removing existing fixed links from the Upper 6 GHz band, as discussed in the Impact Assessment (Annex 2) of our Consultation document.

A3.3 In our April 2026 Consultation, we set out our cost model methodology, and our estimates of the incremental cost incurred as a result of our proposed revocation of fixed link licences in the Upper 6 GHz band.

A3.4 Below we outline and address stakeholders' responses relating to our cost estimates and cost model from the April 2026 Consultation.

Stakeholder responses

A3.5 Cisco expressed support for our baseline cost estimates of £17.5m.[28] The Port of London Authority (PLA) neither agreed nor disagreed with our proposals but considered that, rather than relying on the analysis in our consultation, which estimated costs for an average fixed link, it would be more appropriate to undertake a case-by-case assessment.[29]

A3.6 Some stakeholders involved in the UK energy sector disagreed that the costs of removing fixed links were less than the benefits for using Upper 6 GHz for mobile in high density areas due to the social value of underlying energy services provided by these fixed links.[30] [31]

A3.7 Several stakeholders made comments relating to the difficulty and cost of migrating fixed links to an alternative spectrum band, particularly in the case of offshore links. We address these specific responses in more detail when discussing the alternatives for existing onshore fixed links, and separately in the offshore fixed links section.

Our decision and reasoning

A3.8 We have decided to retain the cost model methodology published in our consultation and supplement it with the evidence of costs associated with the few offshore links intended to be revoked.

A3.9 As we set out in the consultation, our expectation is that existing fixed links will be able to migrate and, as such, the impact relates to the cost of moving rather than a loss of the underlying service. As explained in paragraph A2.16 of Annex 2, we expect technical alternatives to be available that would enable affected users to maintain these services.

[28] Cisco consultation response, p. 14.
[29] Port of London Authority consultation response, pp. 1-2.
[30] Joint Radio Company Ltd consultation response, p. 6.
[31] [✂]

We therefore do not consider it proportionate to include the costs associated with the loss of these services in our cost model, given that we expect them to continue to be provided through alternative means.

A3.10 In the remainder of this annex, we set out our overall approach to cost modelling and explain our key modelling assumptions, the relevant stakeholder responses, and our decisions and reasoning. We first consider onshore fixed links before turning to offshore fixed links.

Model overview

A3.11 The objective of our modelling exercise is to estimate the incremental costs that existing onshore fixed link licensees may incur to maintain their current service through alternative means, should we revoke some of their licences to operate in the Upper 6 GHz band. We focus on incremental costs because our assessment is concerned with the additional expenses that would arise only if users were required to vacate the Upper 6 GHz band. Or put differently, costs that would not have been incurred had they continued using their existing Upper 6 GHz fixed links.

A3.12 We have adopted the following steps in our modelling approach:

a) First, we have assumed that fixed link operators will migrate their existing Upper 6 GHz links into one of three alternative spectrum ranges: <10 GHz, 10–20 GHz, or >20 GHz. We consider this a conservative assumption, as we do not allow for migration to fibre as an alternative solution.
b) We have then estimated the incremental costs associated with migrating an onshore fixed link to a new spectrum band. This involved forecasting both one-off and ongoing capital and operating costs, as well as any potential savings. We have applied an appropriate discount rate to express the net cost in 2025 price terms.
c) We developed our baseline scenario, which assumes that operators of onshore links will migrate their Upper 6 GHz links to alternative frequency ranges based on their existing link's length. To account for potential congestion when moving to preferred ranges, we have further assumed that 25% of links will need to shift to a higher frequency band than their preferred option, resulting in the need for potential additional hops.
d) In our view, the assumptions informing our baseline scenario offer a proportionate alternative to conducting a comprehensive link-by-link assessment of technical characteristics and local spectrum availability to infer likely migration patterns for individual Upper 6 GHz links. Such an exercise would be highly resource-intensive, and the results would quickly become outdated, given that the alternative ranges remain open to new fixed link licence applications.
e) Finally, we have developed sensitivity tests to examine the robustness of the modelling assumptions used in the baseline scenario. To construct a sensitivity analysis for total incremental cost estimates, we have applied four adjustments: first, we have increased our initial cost input assumptions to reflect the highest reasonable cost values gathered from stakeholders; second, we have raised the proportion of links that must migrate to a higher-than-preferred frequency band to 35%; third, we have taken a more conservative approach to determining the number of additional hops required; and fourth, we have disregarded any potential savings.

A3.13 Using the approach described above, we estimate that the total incremental cost of onshore Upper 6 GHz fixed link revocations in the baseline scenario is £14.25m. This is

lower than the £18.8m estimate presented in our consultation, reflecting changes in both the links subject to revocation and the treatment of offshore links.

A3.14 Our modelling approach estimates the average incremental cost of clearing an onshore fixed link. However, we acknowledge that this may not fully reflect the range of costs faced by individual users. Specific Upper 6 GHz fixed link users may incur higher or lower costs when relocating a link, depending on their location and operational circumstances. The assumptions used in our model are designed to represent an average link, from which we can estimate a total cost of clearance. We consider this an appropriate approach to assessing the proportionality of clearing the band.

A3.15 The cost and asset life assumptions used in this annex are based on data collected for the April 2026 consultation through a request for information (RFI) issued to existing Upper 6 GHz fixed link operators under Ofcom's powers granted by the Wireless Telegraphy Act 2006. We do not publish the underlying RFI responses in order to protect the confidentiality of the respondents.

A3.16 The input values used in the baseline scenario are generally informed by averages derived from the responses received, but also reflect our regulatory judgement. However, where certain responses appeared to be outliers, we excluded those values from the averaging process to ensure that the resulting assumptions reflect reasonable and representative cost estimates. For example, when calculating the mean Upper 6 GHz equipment cost from the RFI responses, we excluded a value that was more than seven times higher than the median of all responses provided, as we do not consider this to be representative of the typical fixed link user.

A3.17 The following sections provide a more detailed explanation of each step in our modelling approach, along with more detail on our assumptions. We also present a comprehensive breakdown of the estimated costs and savings under the baseline scenario and in our sensitivity analysis.

Alternatives for existing onshore fixed link users

Our proposal

A3.18 In the cost model outlined in our April 2026 Consultation, we assumed that Upper 6 GHz links requiring revocation will continue to operate via wireless connections using alternative spectrum. We, therefore, considered that operators will migrate each of their links into one of three broad frequency ranges: <10 GHz,[32] 10–20 GHz, or >20 GHz.

A3.19 In principle, existing Upper 6 GHz fixed link operators could maintain their services by replacing a wireless connection with fibre (for example, a leased line). However, for the links proposed for revocation, we considered that most would remain better suited to wireless fixed link connections due to factors such as resilience, latency specifications, or other technical requirements. Nonetheless, we acknowledge that some operators may choose to use fibre as an alternative for a limited number of links in the event their Upper 6 GHz licence is revoked.

A3.20 We assumed that all 147 onshore fixed links we are proposing to clear continue in operation at alternative spectrum frequencies rather than migrating to an alternative

[32] Excluding the Upper 6 GHz band.

technology. This is a conservative assumption because some links, where feasible, may move to fibre where it provides a lower cost alternative to fixed links.

Stakeholder responses

A3.21 In response of to our April 2026 Consultation, several respondents made comments about our approach to fixed link migration.

A3.22 VMO2 stated that "Ofcom has correctly identified that many of these services can be supported through migration to other spectrum bands, or deployment of alternative technologies".[33] Tampnet commented that our cost modelling exercise "may be broadly appropriate for many terrestrial fixed link deployments" however it made further comments that our cost modelling may not be appropriate for offshore links.[34]

A3.23 Several respondents expressed that migration to alternate spectrum frequency is not always feasible. [✂] commented that feasibility to migrate a fixed link relied upon the available spectrum bands in a given area, and planning permission. Tampnet commented that the cost model may not capture the full range of costs that can arise when replacing or migrating offshore fixed links. Tampnet further noted that while onshore links maybe replaced with a low cost fibre alternative, the same is not true of replacing offshore links with offshore/subsea fibre. [✂] noted that for some overwater fixed links, where an alternative hop is not available due to a lack of offshore structures, there exist no feasible additional hops. The PLA stated that the use of *"intermediate land-based hops over water is unfeasible, and the provision of land-based sites can introduce costs that can extend into the millions of pounds"*.[35]

Our decision and reasoning

A3.24 In our April 2026 Consultation, we assumed in our cost estimates that the fixed links we are proposing to clear would operate at an alternative spectrum frequency rather than migrating to an alternative technology. We still view this assumption as conservative as, in the case of onshore links, some links may migrate to fibre where it provides a lower cost alternative to migrating fixed links.

A3.25 There are additional complexities associated with the specific offshore links we intend to revoke, such as the need for a pre-existing intermediary offshore structure as well as additional operational difficulties associated with offshore construction project which can make migrating to an alternative spectrum band more complex and costly for offshore links than onshore links. We recognise that fibre may not be a lower cost alternative for specific offshore links we intend to revoke. We discuss these costs, and migration options in more detail in the "Offshore fixed links" subsection below.

A3.26 We accept that, in some cases, it may not be economically or technically feasible to establish additional hops over water. However, where both ends of a fixed link are onshore, it may still be possible to maintain the connection through the deployment of additional onshore fixed links, although this would depend on the circumstances of the particular link. We recognise that the actual cost of clearing an individual fixed link may therefore be higher or lower than our estimate. However, as explained above, our model is

[33] VMO2 consultation response, p. 16.
[34] Tampnet consultation response, p. 5.
[35] Port of London Authority consultation response, pp. 2-3.

intended to estimate the average cost of clearing an onshore fixed link, rather than the cost of clearing each individual link, and we have considered a significantly more conservative scenario in our sensitivity analysis to provide a check on the many uncertainties involved. We consider this to be an appropriate basis for assessing the proportionality of clearing the Upper 6 GHz band.

A3.27 Notwithstanding this, we note that only nine of the fixed links which we propose to revoke have an end located offshore. We have, for the small number of fixed links we propose to revoke with an offshore end, and where available, obtained and evaluated costs attributable to these specific links.

A3.28 As such, we have decided to retain the assumption whereby the fixed links we are proposing to clear will migrate to an alternative spectrum frequency for onshore links and supplement it with the evidence of costs associated with the evidence of migration options we have seen for offshore links intended to be revoked.[36]

Estimating costs for transitioning for onshore fixed link users to alternative spectrum bands

A3.29 Our objective is to estimate the cost of clearing the Upper 6 GHz band by assessing the incremental costs associated with relocating existing onshore fixed links to alternative frequency spectrum bands. We therefore assess the costs faced by an Upper 6 GHz user when transitioning to one of three alternative frequency ranges, namely: <10 GHz, 10–20 GHz, or >20 GHz.

A3.30 When an onshore Upper 6 GHz user relocates a fixed link to a higher frequency spectrum band, they may incur both costs and potential savings associated with operating in the new band. Our analysis therefore considers the following cost and saving components:

a) **Stranded Equipment Costs:** This includes any one-off capital costs arising from prematurely decommissioning existing Upper 6 GHz equipment or incurring additional installation costs when establishing a link in an alternative new frequency band.
b) **Additional Hop Costs:** This includes both incremental operating and capital costs that may arise from differences in the ongoing expenses of operating a fixed link in a new spectrum band compared to the Upper 6 GHz band. A key reason why the alternative band may require higher ongoing costs is the need for additional hops using new equipment to maintain service quality across the link.
c) **Ongoing Equipment Savings:** This includes any ongoing capital and operating cost savings resulting from the use of lower-cost equipment in higher frequency bands compared to Upper 6 GHz.
d) **Ongoing Site Savings:** This includes any ongoing capital and operating cost savings resulting from the use of lower-cost sites for higher frequency bands compared to Upper 6 GHz.

Stranded equipment costs

A3.31 We estimate one-off transition costs based on the capital costs incurred where users are required to replace equipment before the end of its expected operational lifespan. Such costs are incremental, as they would not have arisen had the user remained in the Upper 6

[36] We discuss the evidence we have seen for the migration for offshore links separately.

GHz band. For this analysis, we assume that all telecommunications equipment must be replaced when migrating to a new spectrum band.

A3.32 To calculate the one-off transition costs, we have:

a) Estimated the average current value of fixed link telecommunications equipment using an estimate for the original capital cost and the average current age of the equipment.
b) Determined the annual cost of existing equipment for each year for the remainder of the equipment's lifetime based on the expected depreciation and cost of capital. We apply straight line depreciation based on the expected lifetime of assets.
c) Considered that existing users could use the five-year revocation notice period to manage the transition to a new spectrum band. We assume that operators can reduce the need to write off capital equipment by moving an individual link to a new band when it reaches the end of its lifetime. This could be at different points over the course of the five-year revocation period. Given this, we have estimated costs on the basis that:
    i) Capital costs will only be written off for equipment that has a remaining lifetime at the start of the revocation period that is greater than five years; and
    ii) The capital costs written off for this equipment are based on the value at the end of the five-year revocation period.
d) Determined the present value of these costs by discounting the costs to a present value using the social time preference rate.[37]

A3.33 Table A3.1 outlines the input assumptions used in calculating the one-off transition costs.

Table A3.1: Assumptions used as part of the one-off cost calculation

Assumption	Input value
Capital Cost of Upper 6 GHz Equipment	£55,000
Installation Cost	50% of Equipment CAPEX
Lifetime of Upper 6 GHz Equipment	10 Years
Weighted Average Cost of Capital (WACC)	5.8%[38]
Social Time Preference Rate	3.5%[39]

Source: Ofcom

A3.34 Using the assumptions outlined above, we estimate the capital cost associated with a single onshore fixed link at the end of the five-year revocation period. As a modelling simplification we have assumed that assets currently deployed by operators have remaining lives that are uniformly distributed between 1 and 10 years, where 10 years is the average lifetime of these assets as informed by our RFI. Table A3.2 presents the

[37] We apply a social time preference rate to be consistent because we have used the Spackman approach to determine the present value of costs. This is appropriate because we are assessing the costs and benefits from clearing spectrum for public benefit as outlined in a Statement by the Joint Regulators Group.
[38] We apply a WACC of 5.8%, based on the most recent estimate for BT Group's "Other UK Telecoms" business reported in the Telecoms Access Review 2026, Annex 16, Table 16.1. We consider this an appropriate proxy for the WACC of Upper 6 GHz fixed-link users, given that fixed links support broadly similar communication services. We convert the OUKT WACC from a nominal to a real value using a CPI inflation assumption of 2.0%, based on the Bank of England's long-term inflation target and the OBR's long-term CPI inflation forecasts.
[39] We determine the present value of costs by using a social time preference rate of 3.5% as suggested by the HM Treasury Green Book.

estimated value of equipment at the end of the revocation period, based on its remaining lifetime, representing the cost that would need to be written off. Given the length of the revocation period, only assets that have been deployed within the last 5 years would still be expected to be in operation at the end of the revocation period, requiring writing-off.

Table A3.2: Cost of writing off fixed link equipment when moving to a new band

Remaining life of equipment at the start of the revocation period	Value to be written-off if revocation period is 5 years
10 Years	£36,945
9 Years	£29,277
8 Years	£21,744
7 Years	£14,350
6 Years	£7,101
Fewer than 6 Years	£0
Average	**£9,947**

Source: Ofcom

A3.35 Our methodology suggests that the average cost of writing off equipment when applying a five-year revocation period would be £9,947.

A3.36 However, we consider this value could potentially be an underestimate of the average one-off costs for moving fixed links by the modelling not capturing some potential dynamics driving additional costs. We have identified two main cost-driving dynamics which may be underestimated in the approach outlined above:

a) There may be additional planning and administrative costs when moving to a new spectrum band, over and above the normal planning and administrative costs which relate to equipment renewal. This could potentially include any incremental costs associated with applying and paying for a new spectrum licence in the new band exceeding the costs that would have been incurred if the user had continued to operate the fixed link in its existing band.

b) We assume the operator can fully use the revocation period to manage the transfer to a new spectrum band. However, there may be additional constraints as part of the transfer process. For example, the migration process could potentially be more efficient when moving several links together. Therefore, some links which are not fully depreciated may be moved at the same time as links that have reached the end of their usable life earlier than the end of the revocation period. This could result in a higher cost than if no migration was required.

A3.37 However, we also recognise that there could also be reasons why the cost could be lower than we have suggested. For example, some equipment could potentially be re-used in the alternative spectrum band.

A3.38 Rather than adding additional complexity to our modelling, we have aimed to account for these additional potential cost-driving dynamics by adding an additional uplift onto the per-link costs we have calculated above (£9,947). We have increased our assumption to a cost of £12,000 per link to reflect these additional factors and the uncertainty in our estimates.

Additional hop costs

A3.39 When migrating an existing fixed link from the Upper 6 GHz band to higher frequency spectrum, it is likely that some links will require an additional hop to maintain service quality. This is because Upper 6 GHz offers better propagation characteristics compared to higher frequency bands, allowing for longer link distances.

A3.40 We have assumed that if an operator migrates a link from the Upper 6 GHz band to the <10 GHz range, it is unlikely that additional hops will be required to maintain service quality. While we acknowledge that this may not hold true for every link, we expect only a very small number of links in this band to require an extra hop. As such, this assumption is highly unlikely to materially impact our overall cost estimates.

A3.41 However, we expect that additional hops could be necessary when migrating to the 10–20 GHz or >20 GHz frequency ranges.

A3.42 To estimate the cost of an additional hops, we follow a three-step approach:

a) We first project the annual capital (including financing costs) and operating costs of deploying a new hop site over a 20-year period. Table A3.3 outlines our cost assumptions for both Urban and Rural sites. We split site operating costs across the assumed number of occupants to reflect how sites are usually shared, in line with what RFI respondents reported.

Table A3.3: Site cost assumptions used as part of the higher ongoing cost calculation

Site Assumption	10-20GHz	>20GHz
Rural Site: Capital Costs	£170,000	£160,000
Rural Site: Operating Costs	£20,000	
Rural Site: Number of Occupants	3	
Urban Site: Capital Costs	£80,000	£70,000
Urban Site: Operating Costs	£10,000	
Urban Site: Number of Occupants	1	
Site Lifetime	20 years	
WACC	5.8%	

Source: Ofcom

b) Next, we calculate the annual capital (including financing costs) and operating costs for the telecommunications equipment required at each site, also over a 20-year horizon. Table 4 outlines our equipment cost assumptions.

c) Next, we combine the costs from steps (a) and (b) to determine the total cost per hop. We then discount this total cost to its present value using the social time preference rate (3.5%) to determine the cost of an additional hop for both Urban and Rural sites.

d) Finally, we calculate a weighted average of the present value cost of an additional hop, based on the expected distribution of Rural and Urban sites. In this calculation, we assume that rural sites represent 69% of the total, while urban sites account for the remaining 31%.[40]

[40] The weights applied to urban and rural sites for estimating the cost of an additional hop are derived from Ofcom's analysis of links proposed for revocation from Upper 6 GHz access in Section 4. These weights reflect the current distribution of links, which we consider a reasonable proxy for the distribution of new required hops.

A3.43 Applying this methodology, we estimate the average ongoing cost (expressed in present value terms as of 2025) of additional hops for a fixed link migrated to the 10–20 GHz band to be £486,022. For links migrated to the >20 GHz band, the estimated present value cost is £450,853.

Ongoing equipment savings

A3.44 Responses to our RFI suggest that fixed link equipment operating in the 10–20 GHz and >20 GHz frequency ranges is typically less expensive than equipment deployed in the Upper 6 GHz band. As a result, operators migrating from Upper 6 GHz to higher frequency ranges may benefit from lower ongoing capital costs.

A3.45 We also expect operators to experience reduced operating expenses when using equipment in these higher frequency ranges.[41] We believe it is appropriate to reflect these ongoing savings in our aggregate cost estimates to ensure a comprehensive understanding of the net incremental cost impact on operators from potential revocation.

A3.46 To estimate these savings, we:

a) project the annualised capital and operating costs of equipment for each of the three frequency ranges;
b) then calculate the annual cost difference between Upper 6 GHz and the alternative frequency band over a 20-year period. This reflects our estimated annual saving; and
c) finally discount these annual savings to present value terms using the social time preference rate. This is done separately for capital and operating costs to clearly present the two types of savings.

A3.47 Using this approach, we estimate the average ongoing equipment savings in present value terms as of 2025. Table A3.4 summarises the capital and operating cost savings by migration band.

Table A3.4: Estimated Ongoing Equipment Savings

PV of Saving	10-20GHz	>20GHz
Equipment Capital	£11,985	£23,971
Equipment Operating	£13,163	£26,326
Total Saving	£25,148	£50,297

Source: Ofcom

Ongoing site savings

A3.48 Responses to our RFI also indicated that site-related costs are in some cases lower for frequency bands above Upper 6 GHz. This may be because higher- frequency equipment is typically smaller and lighter and therefore may require less site space or structural load capacity. Therefore, we believe that operators migrating to higher frequency bands are likely to benefit from reduced ongoing capital costs associated with their sites.

A3.49 These savings are realised progressively as sites reach the end of their useful economic life. For example, given an assumed site lifespan of 20 years, sites constructed just before the revocation year will not be replaced, and thus will not generate savings, until two decades

[41] Since equipment operating costs are calculated as a percentage of capital costs, we also expect operators to experience reduced operating expenses when using equipment in these higher frequency bands.

later. In contrast, sites built 20 years prior to the transition can be replaced immediately at a lower cost from the transition year onward.

A3.50 As with equipment-related savings, we consider it appropriate to include these ongoing site cost reductions in our overall cost estimates for clearing the Upper 6 GHz band. To do so, we calculate the present value of these savings using the following steps:

a) First, we project the capital costs for sites across all three frequency ranges over a 20-year period, based on the existing age of the site at the time of revocation.
b) Next, we estimate the annual capital savings for sites of varying ages and discount these savings using the social time preference rate to calculate their present value.
c) We then calculate a simple average of the present value of savings across sites of different ages. This step assumes an even distribution of Upper 6 GHz fixed link site ages across their useful economic life.
d) Finally, we compute a weighted average of the present value of site savings, based on the expected proportion of rural and urban sites.

A3.51 Using this approach, we estimate the average ongoing site savings in present value terms as of 2025. Table A3.5 summarises the capital cost savings by migration band.

Table A3.5: Estimated ongoing site savings

PV of Saving	10-20GHz	>20GHz
Site Capital Saving	£10,180	£20,361

Source: Ofcom

Cost summary

A3.52 Table A3.6 summarises our estimated cost and saving components for each element associated with migrating links from Upper 6 GHz to alternative frequency bands.

Table A3.6: Summary of cost estimates

Band	<10 GHz	10–20 GHz	>20 GHz
Stranded Assets Cost	£12,000	£12,000	£12,000
Additional Hop Cost	No hop required	£486,022	£450,853
Equipment Saving	£0	£25,148	£50,297
Site Saving	£0	£10,180	£20,361

Source: Ofcom

Baseline scenario

A3.53 The values in Table A3.6 represent the incremental costs and savings for migrating a single Upper 6 GHz link to each of the three substitute frequency ranges. However, as outlined in Section 4, our proposals involve revoking 147 onshore Upper 6 GHz links situated within, or in proximity to, high density areas. Consequently, it is necessary to model how operators currently using the Upper 6 GHz band may choose to reallocate their links across the three alternative frequency ranges.

A3.54 We also recognise that the summary table above only presents the cost of a single additional hop. However, because the links being revoked vary in length, the number of extra hops needed will vary depending on which band the Upper 6 GHz link moves to.

A3.55 In the following section, we set out our approach to identifying the likely migration patterns of existing Upper 6 GHz licensees to alternative frequency ranges in the event of revocation, and to estimating the number of hops required in our baseline scenario.

Assumed migration patterns in the baseline scenario

A3.56 We recognise that an operator's choice of alternative frequency band will depend on the characteristics of the existing link (for example, its length) and on the availability of spectrum in the area. For example, in some cases, other fixed link operators may already be using an operator's preferred alternative band in the same area, meaning it is not available.

A3.57 To determine the expected migration patterns of licensees proposed for revocation, we have set maximum link length values that indicate when an additional hop would be required after migrating to alternative frequency bands. We assume that all Upper 6 GHz links (regardless of their current length) can be moved to <10 GHz frequencies without needing an additional hop, given the similar propagation characteristics in that range. For links moving to the 10–20 GHz band, we assume a hop-free link length of 30km, while for >20 GHz links, we assume a of 10km before an additional hop becomes necessary.[42] These thresholds determine which band links of different lengths will target for migration, e.g., links longer than 30km will first attempt to relocate to the <10 GHz range while links between 10-30km will target the 10–20 GHz range.

Table A3.7: Assumed preferred migration for existing U6 GHz fixed link licensees based on link length

Target Frequency Band	Link lengths	Number of Links	Percentage of Links
<10 GHz	>30km	72	49%
10–20 GHz	10–30km	67	46%
>20 GHz	<10km	8	5%

Source: Ofcom

A3.58 Finally, to reflect potential congestion or limited availability of spectrum in the three alternative frequency ranges, we assume that 25% of links that would ideally migrate to a lower band are instead forced to move to a higher band, resulting in the need for additional hops. We assume that an operator is willing to move at most one frequency band higher than their preferred option. For example, a licensee that would ideally migrate to <10GHz may accept moving to 10–20 GHz but would not move to >20 GHz. The final link numbers by frequency band after accounting for this assumption are shown in Table A3.8.

[42] The 30km and 10km threshold values for the 10–20 GHz and >20 GHz ranges are informed by historical Ofcom-licensed links in those ranges. Importantly, we do not simply select the single longest link to determine these thresholds. Instead, we use the 95th percentile of the cumulative distribution of link lengths in each band. This method provides a balanced approach: it reflects the lengths that links in each band can typically achieve in practice, while recognising that the very longest links often depend on unique geographic conditions that are unlikely to be replicated elsewhere in the UK. We also consider this approach to be conservative, as it deliberately avoids using the single longest link in the band as the basis for the threshold.

Table A3.8: Migration patterns used in the baseline scenario

Alternative Frequency Band	Remain in preferred band with no additional hops required		Forced to use a higher band and requires extra hops	
	Number of Links	Percentage of Links	Number of Links	Percentage of Links
<10GHz	54	37%	0	0%
10-20GHz	50	34%	18	12%
>20GHz	8	5%	17	12%

Source: Ofcom

Number of additional hops in the baseline scenario

A3.59 We recognise that when migrating to an alternative band where additional hops may be required, a fixed link licensee might need more than one additional hop, or may not require an additional hop, depending on the specific link characteristics. We also note that our assumed link length thresholds (30km for the 10–20 GHz band and 10km for frequencies >20 GHz) are intentionally conservative. They are based on Ofcom's analysis of existing licensed fixed links but do not reflect the longest links currently deployed in these ranges. For example, Ofcom licences many 10–20 GHz links that are significantly longer than 30km.

A3.60 It is therefore reasonable, in our view, that if a link is only slightly longer than 30km and cannot migrate to the <10 GHz band but moves instead to the 10–20 GHz range, there remains a strong possibility that it could continue operating without requiring an additional hop. Given that our link length assumptions are already conservative, we do not think it appropriate to impose a further conservative assumption that all links exceeding our threshold link length values must automatically require an additional hop.[43]

A3.61 Instead, we consider it more appropriate to estimate additional hop requirements using a weighted approach that reflects how far a link exceeds the link length assumptions. We do this on a pro-rata basis. For example, for a link of 33km, we would estimate 0.1 additional hops would be required to maintain the link, as the link length exceeds the link length assumption by 10% (3km / 30km).[44] Conversely, for a link of 57km we would estimate 0.9 additional hops would be required as it would be very unlikely that a link of that length could be maintained without an additional hop. While such examples do exist, we understand that they require very favourable circumstances, such as unusually clear geography, to make them possible.

A3.62 Based on the current lengths of the links proposed for revocation, and the assumptions outlined above, we estimate that links requiring additional hops in the 10–20 GHz band will need, on average, 0.8 additional hops, while those in the >20 GHz band will require 1.23 additional hops.

[43] Please note that, in the conservative case, we treat our threshold values as hard maximums link lengths as a conservative assumption. Further details are provided in Table A3.10.

[44] Alternatively, this can be interpreted as follows: if ten 33km links were revoked from the Upper 6 GHz band and had to migrate to the 10–20 GHz range, most would likely be able to do so without requiring an additional hop, but perhaps one out of the ten might need one.

Baseline scenario total cost estimates

A3.63 Based on our estimated costs, savings, and the migration scenarios described above, we calculate that the total incremental cost of clearing the band in our central case is £14.25m. This reflects the following cost and saving components:

a) Costs

i) Additional hops to maintain link communications: £16.6m
ii) Stranded equipment costs: £1.8m

b) Savings

i) from operating lower-cost equipment post-migration: £3.0m
ii) from operating non-U6 GHz sites: £1.2m

Sensitivity Analysis

A3.64 Our baseline estimates represent our best assessment of the total incremental cost of clearing the Upper 6 GHz band for the links proposed for revocation. This baseline reflects a balanced consideration of each cost input component and each modelling assumption incorporated into our analysis.

A3.65 However, we acknowledge that actual costs may differ from this baseline and, in reality, may be higher or lower than our estimate. To account for this uncertainty, we have also developed a second scenario to consider how costs could scale under higher input values and more conservative assumptions.

A3.66 To construct our sensitivity analysis, we developed our conservative scenario, where we first uplift each cost input to the highest plausible value drawn from the RFI submissions and rounded for confidentiality reasons, as opposed to being guided by the average values as set out in the baseline scenario. Table A3.9 sets out the resulting changes for each input.

Table A3.9: Higher cost input values used in the sensitivity analysis

Frequency Band	Baseline Scenario	Conservative Scenario
Equipment: Capital Costs		
Below 10 GHz (inc. Upper 6 GHz)	£55,000	£90,000
10 to 20 GHz	£50,000	£85,000
Above 20 GHz	£45,000	£80,000
Rural Site: Capital Costs		
Below 10 GHz (inc. Upper 6 GHz)	£180,000	£250,000
10 to 20 GHz	£170,000	£250,000
Above 20 GHz	£160,000	£250,000
Urban Site: Capital Costs		
Below 10 GHz (inc. Upper 6 GHz)	£90,000	£100,000
10 to 20GHz	£80,000	£100,000
Above 20 GHz	£70,000	£100,000

Frequency Band	Baseline Scenario	Conservative Scenario
Site Operating Costs (All Frequency Ranges)		
Rural	£20,000	£30,000
Urban	£10,000	£15,000
Other Costs (All Frequency Ranges, % of equipment CAPEX)		
Installation Cost	50%	75%
Infrastructure Cost	10%	15%
Maintenance Cost	12%	18%

Source: Ofcom

A3.67 In the conservative scenario we also make several assumptions about how we define potential savings, migration patterns and estimate the total number of additional hops required. Table A3.10 outlines how we adapt each assumption in the conservative case for our sensitivity analysis.

Table A3.10: Modelling assumptions used in the conservative scenario

Assumption	Baseline Scenario	Conservative Scenario
Equipment and Site Savings	Savings are assumed to occur when operators transition away from higher-cost Upper 6 GHz equipment and sites and instead deploy in the 10–20 GHz and >20 GHz ranges.	We assume that no site or equipment savings arise when migrating to an alternative frequency band.
Migration Patterns	We assume that 25% of links are unable to use their preferred frequency band, necessitating the use of additional hops.	We assume that 35% of links are unable to use their preferred frequency band, necessitating the use of additional hops.
Additional Hops	We apply a weighted methodology described in paragraphs A3.43–A3.46 to determine the required number of additional hops. We estimate that links migrating to the following ranges require: • **10–20 GHz:** 0.8 additional hops • **>20 GHz:** 1.23 additional hops	We assume that the link-length thresholds of 30km (for 10–20 GHz) and 10km (for >20 GHz) operate as hard maximums when determining the additional hops required for links that migrate to higher-frequency ranges. We estimate that links migrating to the following ranges require: • **10–20 GHz:** 1.39 additional hops • **>20 GHz:** 1.7 additional hops

Source: Ofcom

A3.68 The revised cost inputs and assumptions lead to changes across all elements of the model. First, stranded asset costs increase from £9,947 (rounded up to £12,000) to £18,990. We again round this figure up, this time to £24,000, to reflect additional administrative costs associated with link redeployment, as well as the practical limitations that may prevent

operators from fully utilising the entire revocation period (for example, where coordinating multiple link migrations at once generates cost efficiencies).

A3.69 Under the conservative scenario assumptions, the cost of an additional hop also increases substantially. For links operating in the 10–20 GHz range, the per-hop cost increases from £486,022 to £915,504. For links operating >20 GHz, the cost rises from £450,853 to £881,777.

A3.70 Incorporating these revised costs alongside the more conservative migration and additional hop assumptions, we estimate the total incremental cost of revocation for this conservative scenario could be £70.6m.

A3.71 We acknowledge that the costs presented in the conservative scenario are significantly higher than those in the baseline case. However, this approach provides an extreme upper bound of the potential cost range.

A3.72 Our view, however, remains that the baseline estimates provide a more reasonable assessment of total costs and therefore form the primary cost benchmark informing the development of our policy proposals.

Offshore links

A3.73 In the case of the offshore links we propose to revoke, we have engaged with the owners of these fixed links and have gathered information regarding the costs associated with each offshore link proposed for revocation in the April 2026 consultation. Of the 11 offshore fixed link licences proposed for revocation in our consultation, we are no longer proposing to revoke 2 of these licences. We do however discuss the evidence of the potential costs and migration patterns of these 11 offshore fixed link licences here as they are indicative of the general migration costs that offshore links may face.

A3.74 In the case of onshore links, we have noted that fibre can be a lower-cost alternative to fixed links. For offshore links this is far less likely to be the case due to the very high cost of installing subsea fibre. We have also seen evidence that the cost of additional hops that are offshore can be more expensive than additional onshore hops. We note that there is significant variation in the costs. For example, bad weather can result in service crews remaining on standby for long periods, incurring costs while waiting for clear weather to implement structural work.

A3.75 Several offshore fixed link licenses operate on parallel links using the same point-to-point link-path. We expect that licenses operating over the same path are likely to be addressed through a common migration solution where those licenses are simultaneously revoked.[45] This is also the basis on which affected stakeholders provided data for their offshore links, focusing on the costs of migrations and mitigations on a per-link-path basis rather than a per-licence basis.

A3.76 [✂] provided evidence of the costs associated with its offshore links when installing active equipment. It also furnished information relating to the possible migration scenarios for its fixed links. [✂]

[45] In our April 2026 Consultation, we proposed to revoke 11 offshore fixed link licences across 4 distinct link paths. Two of these licences operate across a shared link path and in the lower 160 MHz of the Upper 6 GHz band (6425–6585 MHz), which we have designated for Wi-Fi priority. We are therefore no longer proposing to revoke these two licences, reducing the affected number of link-paths from four to three.

A3.77 We have also seen evidence of higher costs due to the additional operational complexities of operating at sea. In our information gathering for the offshore links proposed for revocation, we have not seen cost estimates exceeding £1 million where alternative structures are available.[46] In one instance, [✂] was able to show the cost comparison between two offshore links where one experienced multiple weeks of weather delays resulting in costs being approximately 50% higher. As for the option of subsea fibre, we have seen cost estimates exceeding [✂] for the replacement of a single link with subsea fibre.

A3.78 [✂] provided a high-level estimate of £[✂] million per offshore structure, as well as a [✂]% annual operations and maintenance charge, although the estimates provided were not detailed so our ability to rely on these estimates is limited.[47]

A3.79 The offshore cost information presented above illustrates the potential migration costs for these links and is not included in our modelled onshore cost estimates, either our baseline scenario or conservative scenario used in our sensitivity analysis. Rather, we consider this evidence is indicative of how offshore links could have materially higher costs than onshore links, which we have considered in our assessment for the revocation of these specific links.

[46] [✂]
[47] [✂]